Foreword

(CAPTIVE PANEL SCREW)

CAPTIVE PANEL SCREW- STYLE 1

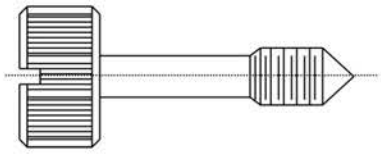

CAPTIVE PANEL SCREW-STYLE 2

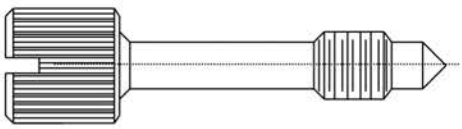

CAPTIVE PANEL SCREW-STYLE 3

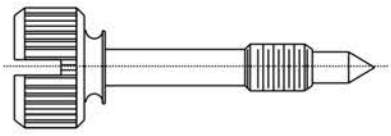

CAPTIVE PANEL SCREW- STYLE 4

CAPTIVE PANEL SCREW-STYLE 5

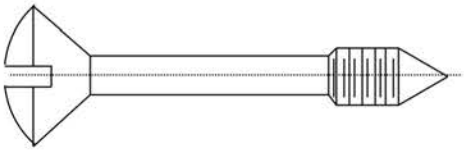

CAPTIVE PANEL SCREW-STYLE 6

CPS1- 44001-SS- SB5

Select Finish

Select Material

Select Part No.

Select Captive Panel Screw Style

Material Description	Code
Brass	B
Carbon Steel	S
300 Series Stainless Steel	SS

How to order Captive Panel Screw

Cpative Panel Screw	Code
Style 1	CPS1
Style 2	CPS2
Style 3	CPS3
Style 4	CPS4
Style 5	CPS5
Style 6	CPS6

Finish Description	Code
Nickel Plated	S1
Chrome Plated	S2
Satin Chrome	S6
Zinc Plated	S10
Zinc Yellow Chromate	S11
Black Oxide	S22
Black Zinc	S23
Tin Plated	S24
No Finish	S14
Passivate	SB5

Custom modified products are available.

CAPTIVE PANEL SCREW
STYLE 1 American Standard

Captive Screw	Captive Screw Retainer
Style 1	Style 2,3,4,5
Style 2	Style 1
Style 3	Style 6,7

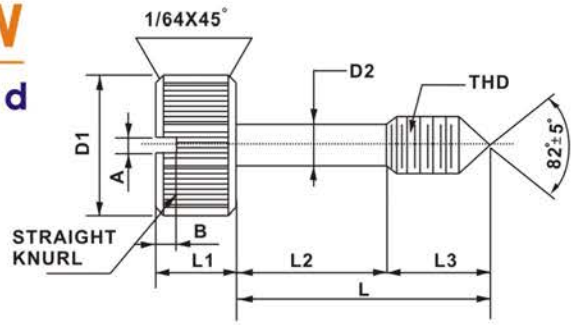

Part No.	Thread	D1	L1	D2	L	L2	L3	A	B	KNURL TPI
		+.015 -.000	+.010 -.010	+.005 -.005	+.015 -.015	+.010 -.010	+.015 -.015	+.005 -.000	+.010 -.000	
CPS1-44001	4-40	5/16	3/16	.078	21/32	3/8	9/32	.036	1/16	35
CPS1-44002	4-40	5/16	3/16	.078	23/32	7/16	9/32	.036	1/16	35
CPS1-44003	4-40	5/16	3/16	.078	25/32	1/2	9/32	.036	1/16	35
CPS1-44004	4-40	5/16	3/16	.078	27/32	9/16	9/32	.036	1/16	35
CPS1-44005	4-40	5/16	3/16	.078	29/32	5/8	9/32	.036	1/16	35
CPS1-63201	6-32	5/16	3/16	.095	21/32	3/8	9/32	.045	1/16	35
CPS1-63202	6-32	5/16	3/16	.095	23/32	7/16	9/32	.045	1/16	35
CPS1-63203	6-32	5/16	3/16	.095	25/32	1/2	9/32	.045	1/16	35
CPS1-63204	6-32	5/16	3/16	.095	27/32	9/16	9/32	.045	1/16	35
CPS1-63205	6-32	5/16	3/16	.095	29/32	5/8	9/32	.045	1/16	35
CPS1-63206	6-32	3/8	3/16	.095	21/32	3/8	3/8	.045	1/16	30
CPS1-63207	6-32	3/8	3/16	.095	23/32	7/16	3/8	.045	1/16	30
CPS1-63208	6-32	3/8	3/16	.095	25/32	1/2	3/8	.045	1/16	30
CPS1-63209	6-32	3/8	3/16	.095	27/32	9/16	3/8	.045	1/16	30
CPS1-63210	6-32	3/8	3/16	.095	29/32	5/8	3/8	.045	1/16	30
CPS1-83201	8-32	7/16	1/4	.120	5/8	1/4	3/8	1/16	1/16	30
CPS1-83202	8-32	7/16	1/4	.120	11/16	5/16	3/8	1/16	1/16	30
CPS1-83203	8-32	7/16	1/4	.120	3/4	3/8	3/8	1/16	1/16	30
CPS1-83204	8-32	7/16	1/4	.120	13/16	7/16	3/8	1/16	1/16	30
CPS1-83205	8-32	7/16	1/4	.120	7/8	1/2	3/8	1/16	1/16	30
CPS1-83206	8-32	7/16	1/4	.120	15/16	9/16	3/8	1/16	1/16	30
CPS1-83207	8-32	7/16	1/4	.120	1	5/8	3/8	1/16	1/16	30
CPS1-83208	8-32	7/16	1/4	.120	1-1/16	11/16	3/8	1/16	1/16	30
CPS1-83209	8-32	7/16	1/4	.120	1-1/8	3/4	3/8	1/16	1/16	30
CPS1-83210	8-32	7/16	1/4	.120	1-3/16	13/16	3/8	1/16	1/16	30
CPS1-83211	8-32	7/16	1/4	.120	1-1/4	7/8	3/8	1/16	1/16	30
CPS1-83212	8-32	7/16	1/4	.120	1-5/16	15/16	3/8	1/16	1/16	30
CPS1-83213	8-32	7/16	1/4	.120	1-3/8	1	3/8	1/16	1/16	30
CPS1-83214	8-32	7/16	1/4	.120	1-7/16	1-1/16	3/8	1/16	1/16	30
CPS1-83215	8-32	7/16	1/4	.120	1-1/2	1-1/8	3/8	1/16	1/16	30
CPS1-83216	8-32	7/16	1/4	.120	1-9/16	1-3/16	3/8	1/16	1/16	30
CPS1-83217	8-32	7/16	1/4	.120	1-5/8	1-1/4	3/8	1/16	1/16	30
CPS1-83218	8-32	7/16	1/4	.120	1-11/16	1-5/16	3/8	1/16	1/16	30
CPS1-83219	8-32	7/16	1/4	.120	1/3/4	1-3/8	3/8	1/16	1/16	30
CPS1-83220	8-32	7/16	1/4	.120	1-13/16	1-7/16	3/8	1/16	1/16	30
CPS1-83221	8-32	7/16	1/4	.120	1-7/8	1-1/2	3/8	1/16	1/16	30
CPS1-83222	8-32	7/16	1/4	.120	1-15/16	1-9/16	3/8	1/16	1/16	30
CPS1-83223	8-32	7/16	1/4	.120	2	1-5/8	3/8	1/16	1/16	30

Custom modified products are available.

CAPTIVE PANEL SCREW

STYLE 1 American Standard

Captive Screw	Captive Screw Retainer
Style 1	Style 2,3,4,5
Style 2	Style 1
Style 3	Style 6,7

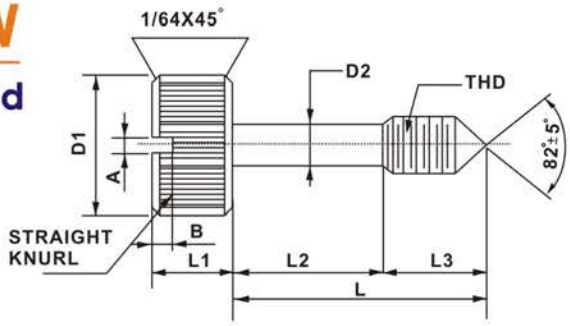

Part No.	Thread	D1	L1	D2	L	L2	L3	A	B	KNURL TPI
		+.015 -.000	+.010 -.010	+.005 -.005	+.015 -.015	+.010 -.010	+.015 -.015	+.005 -.000	+.010 -.000	
CPS1-102401	10-24	7/16	1/4	.130	5/8	1/4	3/8	1/16	1/16	30
CPS1-102402	10-24	7/16	1/4	.130	11/16	5/16	3/8	1/16	1/16	30
CPS1-102403	10-24	7/16	1/4	.130	3/4	3/8	3/8	1/16	1/16	30
CPS1-102404	10-24	7/16	1/4	.130	13/16	7/16	3/8	1/16	1/16	30
CPS1-102405	10-24	7/16	1/4	.130	7/8	1/2	3/8	1/16	1/16	30
CPS1-102406	10-24	7/16	1/4	.130	15/16	9/16	3/8	1/16	1/16	30
CPS1-102407	10-24	7/16	1/4	.130	1	5/8	3/8	1/16	1/16	30
CPS1-102408	10-24	7/16	1/4	.130	1-1/16	11/16	3/8	1/16	1/16	30
CPS1-102409	10-24	7/16	1/4	.130	1-1/8	3/4	3/8	1/16	1/16	30
CPS1-102410	10-24	7/16	1/4	.130	1-3/16	13/16	3/8	1/16	1/16	30
CPS1-102411	10-24	7/16	1/4	.130	1-1/4	7/8	3/8	1/16	1/16	30
CPS1-102412	10-24	7/16	1/4	.130	1-5/16	15/16	3/8	1/16	1/16	30
CPS1-102413	10-24	7/16	1/4	.130	1-3/8	1	3/8	1/16	1/16	30
CPS1-102414	10-24	7/16	1/4	.130	1-7/16	1-1/16	3/8	1/16	1/16	30
CPS1-102415	10-24	7/16	1/4	.130	1-1/2	1-1/8	3/8	1/16	1/16	30
CPS1-102416	10-24	7/16	1/4	.130	1-9/16	1-3/16	3/8	1/16	1/16	30
CPS1-102417	10-24	7/16	1/4	.130	1-5/8	1-1/4	3/8	1/16	1/16	30
CPS1-102418	10-24	7/16	1/4	.130	1-11/16	1-5/16	3/8	1/16	1/16	30
CPS1-102419	10-24	7/16	1/4	.130	1/3/4	1-3/8	3/8	1/16	1/16	30
CPS1-102420	10-24	7/16	1/4	.130	1-13/16	1-7/16	3/8	1/16	1/16	30
CPS1-102421	10-24	7/16	1/4	.130	1-7/8	1-1/2	3/8	1/16	1/16	30
CPS1-102422	10-24	7/16	1/4	.130	1-15/16	1-9/16	3/8	1/16	1/16	30
CPS1-102423	10-24	7/16	1/4	.130	2	1-5/8	3/8	1/16	1/16	30
CPS1-103201	10-32	7/16	1/4	.130	5/8	1/4	3/8	1/16	1/16	30
CPS1-103202	10-32	7/16	1/4	.130	11/16	5/16	3/8	1/16	1/16	30
CPS1-103203	10-32	7/16	1/4	.130	3/4	3/8	3/8	1/16	1/16	30
CPS1-103204	10-32	7/16	1/4	.130	13/16	7/16	3/8	1/16	1/16	30
CPS1-103205	10-32	7/16	1/4	.130	7/8	1/2	3/8	1/16	1/16	30
CPS1-103206	10-32	7/16	1/4	.130	15/16	9/16	3/8	1/16	1/16	30
CPS1-103207	10-32	7/16	1/4	.130	1	5/8	3/8	1/16	1/16	30
CPS1-103208	10-32	7/16	1/4	.130	1-1/16	11/16	3/8	1/16	1/16	30
CPS1-103209	10-32	7/16	1/4	.130	1-1/8	3/4	3/8	1/16	1/16	30
CPS1-103210	10-32	7/16	1/4	.130	1-3/16	13/16	3/8	1/16	1/16	30
CPS1-103211	10-32	7/16	1/4	.130	1-1/4	7/8	3/8	1/16	1/16	30
CPS1-103212	10-32	7/16	1/4	.130	1-5/16	15/16	3/8	1/16	1/16	30
CPS1-103213	10-32	7/16	1/4	.130	1-3/8	1	3/8	1/16	1/16	30
CPS1-103214	10-32	7/16	1/4	.130	1-7/16	1-1/16	3/8	1/16	1/16	30
CPS1-103215	10-32	7/16	1/4	.130	1-1/2	1-1/8	3/8	1/16	1/16	30
CPS1-103216	10-32	7/16	1/4	.130	1-9/16	1-3/16	3/8	1/16	1/16	30
CPS1-103217	10-32	7/16	1/4	.130	1-5/8	1-1/4	3/8	1/16	1/16	30
CPS1-103218	10-32	7/16	1/4	.130	1-11/16	1-5/16	3/8	1/16	1/16	30
CPS1-103219	10-32	7/16	1/4	.130	1/3/4	1-3/8	3/8	1/16	1/16	30
CPS1-103220	10-32	7/16	1/4	.130	1-13/16	1-7/16	3/8	1/16	1/16	30
CPS1-103221	10-32	7/16	1/4	.130	1-7/8	1-1/2	3/8	1/16	1/16	30
CPS1-103222	10-32	7/16	1/4	.130	1-15/16	1-9/16	3/8	1/16	1/16	30
CPS1-103223	10-32	7/16	1/4	.130	2	1-5/8	3/8	1/16	1/16	30

Custom modified products are available.

CAPTIVE PANEL SCREW
STYLE 1 American Standard

Captive Screw	Captive Screw Retainer
Style 1	Style 2,3,4,5
Style 2	Style 1
Style 3	Style 6,7

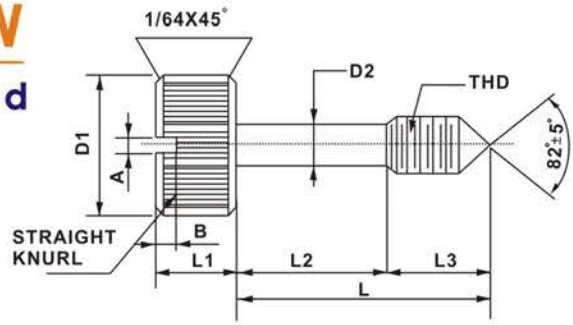

Part No.	Thread	D1 +.015 -.000	L1 +.010 -.010	D2 +.005 -.005	L +.015 -.015	L2 +.010 -.010	L3 +.015 -.015	A +.005 -.000	B +.010 -.000	KNURL TPI
CPS1-122401	12-24	9/16	1/4	.150	5/8	1/4	3/8	1/16	3/32	30
CPS1-122402	12-24	9/16	1/4	.150	11/16	5/16	3/8	1/16	3/32	30
CPS1-122403	12-24	9/16	1/4	.150	3/4	3/8	3/8	1/16	3/32	30
CPS1-122404	12-24	9/16	1/4	.150	13/16	7/16	3/8	1/16	3/32	30
CPS1-122405	12-24	9/16	1/4	.150	7/8	1/2	3/8	1/16	3/32	30
CPS1-122406	12-24	9/16	1/4	.150	15/16	9/16	3/8	1/16	3/32	30
CPS1-122407	12-24	9/16	1/4	.150	1	5/8	3/8	1/16	3/32	30
CPS1-122408	12-24	9/16	1/4	.150	1-1/16	11/16	3/8	1/16	3/32	30
CPS1-122409	12-24	9/16	1/4	.150	1-1/8	3/4	3/8	1/16	3/32	30
CPS1-122410	12-24	9/16	1/4	.150	1-3/16	13/16	3/8	1/16	3/32	30
CPS1-122411	12-24	9/16	1/4	.150	1-1/4	7/8	3/8	1/16	3/32	30
CPS1-122412	12-24	9/16	1/4	.150	1-5/16	15/16	3/8	1/16	3/32	30
CPS1-122413	12-24	9/16	1/4	.150	1-3/8	1	3/8	1/16	3/32	30
CPS1-122414	12-24	9/16	1/4	.150	1-7/16	1-1/16	3/8	1/16	3/32	30
CPS1-122415	12-24	9/16	1/4	.150	1-1/2	1-1/8	3/8	1/16	3/32	30
CPS1-122416	12-24	9/16	1/4	.150	1-9/16	1-3/16	3/8	1/16	3/32	30
CPS1-122417	12-24	9/16	1/4	.150	1-5/8	1-1/4	3/8	1/16	3/32	30
CPS1-122418	12-24	9/16	1/4	.150	1-11/16	1-5/16	3/8	1/16	3/32	30
CPS1-122419	12-24	9/16	1/4	.150	1/3/4	1-3/8	3/8	1/16	3/32	30
CPS1-122420	12-24	9/16	1/4	.150	1-13/16	1-7/16	3/8	1/16	3/32	30
CPS1-122421	12-24	9/16	1/4	.150	1-7/8	1-1/2	3/8	1/16	3/32	30
CPS1-122422	12-24	9/16	1/4	.150	1-15/16	1-9/16	3/8	1/16	3/32	30
CPS1-122423	12-24	9/16	1/4	.150	2	1-5/8	3/8	1/16	3/32	30
CPS1-142001	1/4-20	9/16	1/4	.175	5/8	1/4	3/8	1/16	3/32	30
CPS1-142002	1/4-20	9/16	1/4	.175	11/16	5/16	3/8	1/16	3/32	30
CPS1-142003	1/4-20	9/16	1/4	.175	3/4	3/8	3/8	1/16	3/32	30
CPS1-142004	1/4-20	9/16	1/4	.175	13/16	7/16	3/8	1/16	3/32	30
CPS1-142005	1/4-20	9/16	1/4	.175	7/8	1/2	3/8	1/16	3/32	30
CPS1-142006	1/4-20	9/16	1/4	.175	15/16	9/16	3/8	1/16	3/32	30
CPS1-142007	1/4-20	9/16	1/4	.175	1	5/8	3/8	1/16	3/32	30
CPS1-142008	1/4-20	9/16	1/4	.175	1-1/16	11/16	3/8	1/16	3/32	30
CPS1-142009	1/4-20	9/16	1/4	.175	1-1/8	3/4	3/8	1/16	3/32	30
CPS1-142010	1/4-20	9/16	1/4	.175	1-3/16	13/16	3/8	1/16	3/32	30
CPS1-142011	1/4-20	9/16	1/4	.175	1-1/4	7/8	3/8	1/16	3/32	30
CPS1-142012	1/4-20	9/16	1/4	.175	1-5/16	15/16	3/8	1/16	3/32	30
CPS1-142013	1/4-20	9/16	1/4	.175	1-3/8	1	3/8	1/16	3/32	30
CPS1-142014	1/4-20	9/16	1/4	.175	1-7/16	1-1/16	3/8	1/16	3/32	30
CPS1-142015	1/4-20	9/16	1/4	.175	1-1/2	1-1/8	3/8	1/16	3/32	30
CPS1-142016	1/4-20	9/16	1/4	.175	1-9/16	1-3/16	3/8	1/16	3/32	30
CPS1-142017	1/4-20	9/16	1/4	.175	1-5/8	1-1/4	3/8	1/16	3/32	30
CPS1-142018	1/4-20	9/16	1/4	.175	1-11/16	1-5/16	3/8	1/16	3/32	30
CPS1-142019	1/4-20	9/16	1/4	.175	1/3/4	1-3/8	3/8	1/16	3/32	30
CPS1-142020	1/4-20	9/16	1/4	.175	1-13/16	1-7/16	3/8	1/16	3/32	30
CPS1-142021	1/4-20	9/16	1/4	.175	1-7/8	1-1/2	3/8	1/16	3/32	30
CPS1-142022	1/4-20	9/16	1/4	.175	1-15/16	1-9/16	3/8	1/16	3/32	30
CPS1-142023	1/4-20	9/16	1/4	.175	2	1-5/8	3/8	1/16	3/32	30

Custom modified products are available.

CAPTIVE PANEL SCREW
STYLE 1 American Standard

Captive Screw	Captive Screw Retainer
Style 1	Style 2,3,4,5
Style 2	Style 1
Style 3	Style 6,7

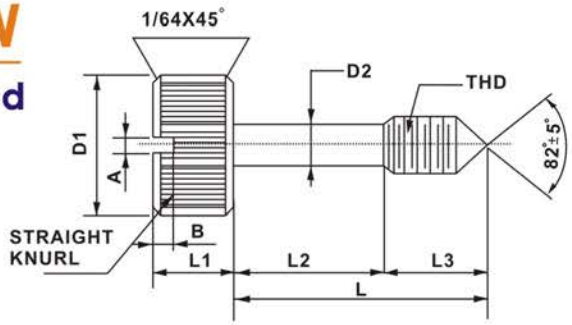

Part No.	Thread	D1	L1	D2	L	L2	L3	A	B	KNURL TPI
		+.015 -.000	+.010 -.010	+.005 -.005	+.015 -.015	+.010 -.010	+.015 -.015	+.005 -.000	+.010 -.000	
CPS1-142024	1/4-20	3/4	1/4	.175	5/8	1/4	3/8	1/16	1/8	30
CPS1-142025	1/4-20	3/4	1/4	.175	11/16	5/16	3/8	1/16	1/8	30
CPS1-142026	1/4-20	3/4	1/4	.175	3/4	3/8	3/8	1/16	1/8	30
CPS1-142027	1/4-20	3/4	1/4	.175	13/16	7/16	3/8	1/16	1/8	30
CPS1-142028	1/4-20	3/4	1/4	.175	7/8	1/2	3/8	1/16	1/8	30
CPS1-142029	1/4-20	3/4	1/4	.175	15/16	9/16	3/8	1/16	1/8	30
CPS1-142030	1/4-20	3/4	1/4	.175	1	5/8	3/8	1/16	1/8	30
CPS1-142031	1/4-20	3/4	1/4	.175	1-1/16	11/16	3/8	1/16	1/8	30
CPS1-142032	1/4-20	3/4	1/4	.175	1-1/8	3/4	3/8	1/16	1/8	30
CPS1-142033	1/4-20	3/4	1/4	.175	1-3/16	13/16	3/8	1/16	1/8	30
CPS1-142034	1/4-20	3/4	1/4	.175	1-1/4	7/8	3/8	1/16	1/8	30
CPS1-142035	1/4-20	3/4	1/4	.175	1-5/16	15/16	3/8	1/16	1/8	30
CPS1-142036	1/4-20	3/4	1/4	.175	1-3/8	1	3/8	1/16	1/8	30
CPS1-142037	1/4-20	3/4	1/4	.175	1-7/16	1-1/16	3/8	1/16	1/8	30
CPS1-142038	1/4-20	3/4	1/4	.175	1-1/2	1-1/8	3/8	1/16	1/8	30
CPS1-142039	1/4-20	3/4	1/4	.175	1-9/16	1-3/16	3/8	1/16	1/8	30
CPS1-142040	1/4-20	3/4	1/4	.175	1-5/8	1-1/4	3/8	1/16	1/8	30
CPS1-142041	1/4-20	3/4	1/4	.175	1-11/16	1-5/16	3/8	1/16	1/8	30
CPS1-142042	1/4-20	3/4	1/4	.175	1/3/4	1-3/8	3/8	1/16	1/8	30
CPS1-142043	1/4-20	3/4	1/4	.175	1-13/16	1-7/16	3/8	1/16	1/8	30
CPS1-142044	1/4-20	3/4	1/4	.175	1-7/8	1-1/2	3/8	1/16	1/8	30
CPS1-142045	1/4-20	3/4	1/4	.175	1-15/16	1-9/16	3/8	1/16	1/8	30
CPS1-142046	1/4-20	3/4	1/4	.175	2	1-5/8	3/8	1/16	1/8	30
CPS1-142801	1/4-28	9/16	1/4	.175	5/8	1/4	3/8	1/16	3/32	30
CPS1-142802	1/4-28	9/16	1/4	.175	11/16	5/16	3/8	1/16	3/32	30
CPS1-142803	1/4-28	9/16	1/4	.175	3/4	3/8	3/8	1/16	3/32	30
CPS1-142804	1/4-28	9/16	1/4	.175	13/16	7/16	3/8	1/16	3/32	30
CPS1-142805	1/4-28	9/16	1/4	.175	7/8	1/2	3/8	1/16	3/32	30
CPS1-142806	1/4-28	9/16	1/4	.175	15/16	9/16	3/8	1/16	3/32	30
CPS1-142807	1/4-28	9/16	1/4	.175	1	5/8	3/8	1/16	3/32	30
CPS1-142808	1/4-28	9/16	1/4	.175	1-1/16	11/16	3/8	1/16	3/32	30
CPS1-142809	1/4-28	9/16	1/4	.175	1-1/8	3/4	3/8	1/16	3/32	30
CPS1-142810	1/4-28	9/16	1/4	.175	1-3/16	13/16	3/8	1/16	3/32	30
CPS1-142811	1/4-28	9/16	1/4	.175	1-1/4	7/8	3/8	1/16	3/32	30
CPS1-142812	1/4-28	9/16	1/4	.175	1-5/16	15/16	3/8	1/16	3/32	30
CPS1-142813	1/4-28	9/16	1/4	.175	1-3/8	1	3/8	1/16	3/32	30
CPS1-142814	1/4-28	9/16	1/4	.175	1-7/16	1-1/16	3/8	1/16	3/32	30
CPS1-142815	1/4-28	9/16	1/4	.175	1-1/2	1-1/8	3/8	1/16	3/32	30
CPS1-142816	1/4-28	9/16	1/4	.175	1-9/16	1-3/16	3/8	1/16	3/32	30
CPS1-142817	1/4-28	9/16	1/4	.175	1-5/8	1-1/4	3/8	1/16	3/32	30
CPS1-142818	1/4-28	9/16	1/4	.175	1-11/16	1-5/16	3/8	1/16	3/32	30
CPS1-142819	1/4-28	9/16	1/4	.175	1/3/4	1-3/8	3/8	1/16	3/32	30
CPS1-142820	1/4-28	9/16	1/4	.175	1-13/16	1-7/16	3/8	1/16	3/32	30
CPS1-142821	1/4-28	9/16	1/4	.175	1-7/8	1-1/2	3/8	1/16	3/32	30
CPS1-142822	1/4-28	9/16	1/4	.175	1-15/16	1-9/16	3/8	1/16	3/32	30
CPS1-142823	1/4-28	9/16	1/4	.175	2	1-5/8	3/8	1/16	3/32	30

Custom modified products are available.

CAPTIVE PANEL SCREW
STYLE 1 American Standard

Captive Screw	Captive Screw Retainer
Style 1	Style 2,3,4,5
Style 2	Style 1
Style 3	Style 6,7

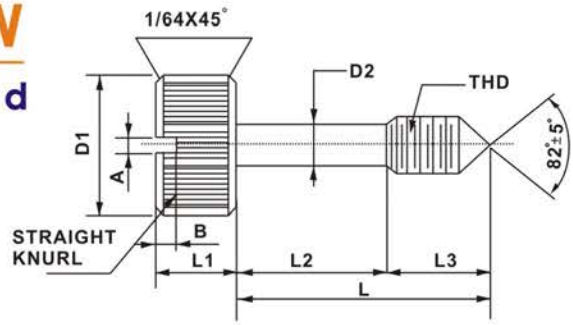

Part No.	Thread	D1	L1	D2	L	L2	L3	A	B	KNURL TPI
		+.015 -.000	+.010 -.010	+.005 -.005	+.015 -.015	+.010 -.010	+.015 -.015	+.005 -.000	+.010 -.000	
CPS1-142824	1/4-28	3/4	1/4	.175	5/8	1/4	3/8	1/16	1/8	30
CPS1-142825	1/4-28	3/4	1/4	.175	11/16	5/16	3/8	1/16	1/8	30
CPS1-142826	1/4-28	3/4	1/4	.175	3/4	3/8	3/8	1/16	1/8	30
CPS1-142827	1/4-28	3/4	1/4	.175	13/16	7/16	3/8	1/16	1/8	30
CPS1-142828	1/4-28	3/4	1/4	.175	7/8	1/2	3/8	1/16	1/8	30
CPS1-142829	1/4-28	3/4	1/4	.175	15/16	9/16	3/8	1/16	1/8	30
CPS1-142830	1/4-28	3/4	1/4	.175	1	5/8	3/8	1/16	1/8	30
CPS1-142831	1/4-28	3/4	1/4	.175	1-1/16	11/16	3/8	1/16	1/8	30
CPS1-142832	1/4-28	3/4	1/4	.175	1-1/8	3/4	3/8	1/16	1/8	30
CPS1-142833	1/4-28	3/4	1/4	.175	1-3/16	13/16	3/8	1/16	1/8	30
CPS1-142834	1/4-28	3/4	1/4	.175	1-1/4	7/8	3/8	1/16	1/8	30
CPS1-142835	1/4-28	3/4	1/4	.175	1-5/16	15/16	3/8	1/16	1/8	30
CPS1-142836	1/4-28	3/4	1/4	.175	1-3/8	1	3/8	1/16	1/8	30
CPS1-142837	1/4-28	3/4	1/4	.175	1-7/16	1-1/16	3/8	1/16	1/8	30
CPS1-142838	1/4-28	3/4	1/4	.175	1-1/2	1-1/8	3/8	1/16	1/8	30
CPS1-142839	1/4-28	3/4	1/4	.175	1-9/16	1-3/16	3/8	1/16	1/8	30
CPS1-142840	1/4-28	3/4	1/4	.175	1-5/8	1-1/4	3/8	1/16	1/8	30
CPS1-142841	1/4-28	3/4	1/4	.175	1-11/16	1-5/16	3/8	1/16	1/8	30
CPS1-142842	1/4-28	3/4	1/4	.175	1/3/4	1-3/8	3/8	1/16	1/8	30
CPS1-142843	1/4-28	3/4	1/4	.175	1-13/16	1-7/16	3/8	1/16	1/8	30
CPS1-142844	1/4-28	3/4	1/4	.175	1-7/8	1-1/2	3/8	1/16	1/8	30
CPS1-142845	1/4-28	3/4	1/4	.175	1-15/16	1-9/16	3/8	1/16	1/8	30
CPS1-142846	1/4-28	3/4	1/4	.175	2	1-5/8	3/8	1/16	1/8	30
CPS1-5161801	5/16-18	9/16	1/4	.235	1	5/8	3/8	1/16	3/32	30
CPS1-5161802	5/16-18	9/16	1/4	.235	1-1/16	11/16	3/8	1/16	3/32	30
CPS1-5161803	5/16-18	9/16	1/4	.235	1-1/8	3/4	3/8	1/16	3/32	30
CPS1-5161804	5/16-18	9/16	1/4	.235	1-3/16	13/16	3/8	1/16	3/32	30
CPS1-5161805	5/16-18	9/16	1/4	.235	1-1/4	7/8	3/8	1/16	3/32	30
CPS1-5161806	5/16-18	9/16	1/4	.235	1-5/16	15/16	3/8	1/16	3/32	30
CPS1-5161807	5/16-18	9/16	1/4	.235	1-3/8	1	3/8	1/16	3/32	30
CPS1-5161808	5/16-18	9/16	1/4	.235	1-7/16	1-1/16	3/8	1/16	3/32	30
CPS1-5161809	5/16-18	9/16	1/4	.235	1-1/2	1-1/8	3/8	1/16	3/32	30
CPS1-5161810	5/16-18	9/16	1/4	.235	1-9/16	1-3/16	3/8	1/16	3/32	30
CPS1-5161811	5/16-18	9/16	1/4	.235	1-5/8	1-1/4	3/8	1/16	3/32	30
CPS1-5161812	5/16-18	9/16	1/4	.235	1-11/16	1-5/16	3/8	1/16	3/32	30
CPS1-5161813	5/16-18	9/16	1/4	.235	1/3/4	1-3/8	3/8	1/16	3/32	30
CPS1-5161814	5/16-18	9/16	1/4	.235	1-13/16	1-7/16	3/8	1/16	3/32	30
CPS1-5161815	5/16-18	9/16	1/4	.235	1-7/8	1-1/2	3/8	1/16	3/32	30
CPS1-5161816	5/16-18	9/16	1/4	.235	1-15/16	1-9/16	3/8	1/16	3/32	30
CPS1-5161817	5/16-18	9/16	1/4	.235	2	1-5/8	3/8	1/16	3/32	30

Custom modified products are available.

CAPTIVE PANEL SCREW

STYLE 1 American Standard

Captive Screw	Captive Screw Retainer
Style 1	Style 2,3,4,5
Style 2	Style 1
Style 3	Style 6,7

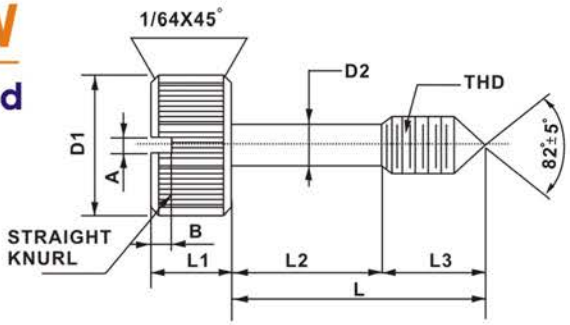

Part No.	Thread	D1	L1	D2	L	L2	L3	A	B	KNURL TPI
		+.015 -.000	+.010 -.010	+.005 -.005	+.015 -.015	+.010 -.010	+.015 -.015	+.005 -.000	+.010 -.000	
CPS1-5161818	5/16-18	3/4	1/4	.235	1	5/8	3/8	1/16	1/8	30
CPS1-5161819	5/16-18	3/4	1/4	.235	1-1/16	11/16	3/8	1/16	1/8	30
CPS1-5161820	5/16-18	3/4	1/4	.235	1-1/8	3/4	3/8	1/16	1/8	30
CPS1-5161821	5/16-18	3/4	1/4	.235	1-3/16	13/16	3/8	1/16	1/8	30
CPS1-5161822	5/16-18	3/4	1/4	.235	1-1/4	7/8	3/8	1/16	1/8	30
CPS1-5161823	5/16-18	3/4	1/4	.235	1-5/16	15/16	3/8	1/16	1/8	30
CPS1-5161824	5/16-18	3/4	1/4	.235	1-3/8	1	3/8	1/16	1/8	30
CPS1-5161825	5/16-18	3/4	1/4	.235	1-7/16	1-1/16	3/8	1/16	1/8	30
CPS1-5161826	5/16-18	3/4	1/4	.235	1-1/2	1-1/8	3/8	1/16	1/8	30
CPS1-5161827	5/16-18	3/4	1/4	.235	1-9/16	1-3/16	3/8	1/16	1/8	30
CPS1-5161828	5/16-18	3/4	1/4	.235	1-5/8	1-1/4	3/8	1/16	1/8	30
CPS1-5161829	5/16-18	3/4	1/4	.235	1-11/16	1-5/16	3/8	1/16	1/8	30
CPS1-5161830	5/16-18	3/4	1/4	.235	1/3/4	1-3/8	3/8	1/16	1/8	30
CPS1-5161831	5/16-18	3/4	1/4	.235	1-13/16	1-7/16	3/8	1/16	1/8	30
CPS1-5161832	5/16-18	3/4	1/4	.235	1-7/8	1-1/2	3/8	1/16	1/8	30
CPS1-5161833	5/16-18	3/4	1/4	.235	1-15/16	1-9/16	3/8	1/16	1/8	30
CPS1-5161834	5/16-18	3/4	1/4	.235	2	1-5/8	3/8	1/16	1/8	30
CPS1-5162401	5/16-24	9/16	1/4	.235	1	5/8	3/8	1/16	3/32	30
CPS1-5162402	5/16-24	9/16	1/4	.235	1-1/16	11/16	3/8	1/16	3/32	30
CPS1-5162403	5/16-24	9/16	1/4	.235	1-1/8	3/4	3/8	1/16	3/32	30
CPS1-5162404	5/16-24	9/16	1/4	.235	1-3/16	13/16	3/8	1/16	3/32	30
CPS1-5162405	5/16-24	9/16	1/4	.235	1-1/4	7/8	3/8	1/16	3/32	30
CPS1-5162406	5/16-24	9/16	1/4	.235	1-5/16	15/16	3/8	1/16	3/32	30
CPS1-5162407	5/16-24	9/16	1/4	.235	1-3/8	1	3/8	1/16	3/32	30
CPS1-5162408	5/16-24	9/16	1/4	.235	1-7/16	1-1/16	3/8	1/16	3/32	30
CPS1-5162409	5/16-24	9/16	1/4	.235	1-1/2	1-1/8	3/8	1/16	3/32	30
CPS1-5162410	5/16-24	9/16	1/4	.235	1-9/16	1-3/16	3/8	1/16	3/32	30
CPS1-5162411	5/16-24	9/16	1/4	.235	1-5/8	1-1/4	3/8	1/16	3/32	30
CPS1-5162412	5/16-24	9/16	1/4	.235	1-11/16	1-5/16	3/8	1/16	3/32	30
CPS1-5162413	5/16-24	9/16	1/4	.235	1/3/4	1-3/8	3/8	1/16	3/32	30
CPS1-5162414	5/16-24	9/16	1/4	.235	1-13/16	1-7/16	3/8	1/16	3/32	30
CPS1-5162415	5/16-24	9/16	1/4	.235	1-7/8	1-1/2	3/8	1/16	3/32	30
CPS1-5162416	5/16-24	9/16	1/4	.235	1-15/16	1-9/16	3/8	1/16	3/32	30
CPS1-5162417	5/16-24	9/16	1/4	.235	2	1-5/8	3/8	1/16	3/32	30
CPS1-5162418	5/16-24	3/4	1/4	.235	1	5/8	3/8	1/16	3/32	30
CPS1-5162419	5/16-24	3/4	1/4	.235	1-1/16	11/16	3/8	1/16	1/8	30
CPS1-5162420	5/16-24	3/4	1/4	.235	1-1/8	3/4	3/8	1/16	1/8	30
CPS1-5162421	5/16-24	3/4	1/4	.235	1-3/16	13/16	3/8	1/16	1/8	30
CPS1-5162422	5/16-24	3/4	1/4	.235	1-1/4	7/8	3/8	1/16	1/8	30
CPS1-5162423	5/16-24	3/4	1/4	.235	1-5/16	15/16	3/8	1/16	1/8	30
CPS1-5162424	5/16-24	3/4	1/4	.235	1-3/8	1	3/8	1/16	1/8	30
CPS1-5162425	5/16-24	3/4	1/4	.235	1-7/16	1-1/16	3/8	1/16	1/8	30
CPS1-5162426	5/16-24	3/4	1/4	.235	1-1/2	1-1/8	3/8	1/16	1/8	30
CPS1-5162427	5/16-24	3/4	1/4	.235	1-9/16	1-3/16	3/8	1/16	1/8	30
CPS1-5162428	5/16-24	3/4	1/4	.235	1-5/8	1-1/4	3/8	1/16	1/8	30
CPS1-5162429	5/16-24	3/4	1/4	.235	1-11/16	1-5/16	3/8	1/16	1/8	30
CPS1-5162430	5/16-24	3/4	1/4	.235	1/3/4	1-3/8	3/8	1/16	1/8	30
CPS1-5162431	5/16-24	3/4	1/4	.235	1-13/16	1-7/16	3/8	1/16	1/8	30
CPS1-5162432	5/16-24	3/4	1/4	.235	1-7/8	1-1/2	3/8	1/16	1/8	30
CPS1-5162433	5/16-24	3/4	1/4	.235	1-15/16	1-9/16	3/8	1/16	1/8	30
CPS1-5162434	5/16-24	3/4	1/4	.235	2	1-5/8	3/8	1/16	1/8	30

Custom modified products are available.

CAPTIVE PANEL SCREW
STYLE 2 American Standard

Captive Screw	Captive Screw Retainer
Style 1	Style 2,3,4,5
Style 2	Style 1
Style 3	Style 6,7

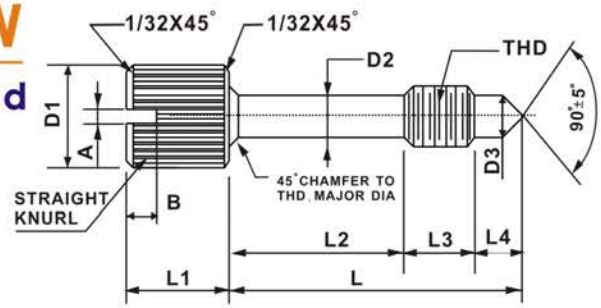

Part No.	Thread	D1	L1	D2	D3	L	L2	L3	L4	A	B	KNURL TPI
		+.015 -.000	+.010 -.010	+.005 -.005	+.000 -.010	+.015 -.015	+.010 -.010	+.000 -.015	+.015 -.015	+.005 -.000	+.010 -.000	
CPS2-44001	4-40	1/4	1/4	.078	.078	3/8	11/64	1/8	5/64	3/64	5/64	35
CPS2-44002	4-40	1/4	1/4	.078	.078	7/16	15/64	1/8	5/64	3/64	5/64	35
CPS2-44003	4-40	1/4	1/4	.078	.078	1/2	19/64	1/8	5/64	3/64	5/64	35
CPS2-44004	4-40	1/4	1/4	.078	.078	9/16	23/64	1/8	5/64	3/64	5/64	35
CPS2-44005	4-40	1/4	1/4	.078	.078	5/8	27/64	1/8	5/64	3/64	5/64	35
CPS2-44006	4-40	1/4	1/4	.078	.078	11/16	31/64	1/8	5/64	3/64	5/64	35
CPS2-44007	4-40	1/4	1/4	.078	.078	3/4	35/64	1/8	5/64	3/64	5/64	35
CPS2-44008	4-40	1/4	1/4	.078	.078	13/16	39/64	1/8	5/64	3/64	5/64	35
CPS2-44009	4-40	1/4	1/4	.078	.078	7/8	43/64	1/8	5/64	3/64	5/64	35
CPS2-44010	4-40	1/4	1/4	.078	.078	15/16	47/64	1/8	5/64	3/64	5/64	35
CPS2-44011	4-40	1/4	1/4	.078	.078	1	51/64	1/8	5/64	3/64	5/64	35
CPS2-44012	4-40	5/16	5/16	.078	.078	3/8	11/64	1/8	5/64	3/64	5/64	35
CPS2-44013	4-40	5/16	5/16	.078	.078	7/16	15/64	1/8	5/64	3/64	5/64	35
CPS2-44014	4-40	5/16	5/16	.078	.078	1/2	19/64	1/8	5/64	3/64	5/64	35
CPS2-44015	4-40	5/16	5/16	.078	.078	9/16	23/64	1/8	5/64	3/64	5/64	35
CPS2-44016	4-40	5/16	5/16	.078	.078	5/8	27/64	1/8	5/64	3/64	5/64	35
CPS2-44017	4-40	5/16	5/16	.078	.078	11/16	31/64	1/8	5/64	3/64	5/64	35
CPS2-44018	4-40	5/16	5/16	.078	.078	3/4	35/64	1/8	5/64	3/64	5/64	35
CPS2-44019	4-40	5/16	5/16	.078	.078	13/16	39/64	1/8	5/64	3/64	5/64	35
CPS2-44020	4-40	5/16	5/16	.078	.078	7/8	43/64	1/8	5/64	3/64	5/64	35
CPS2-44021	4-40	5/16	5/16	.078	.078	15/16	47/64	1/8	5/64	3/64	5/64	35
CPS2-44022	4-40	5/16	5/16	.078	.078	1	51/64	1/8	5/64	3/64	5/64	35
CPS2-63201	6-32	5/16	5/16	.095	.095	7/16	1/8	7/32	3/32	3/64	5/64	35
CPS2-63202	6-32	5/16	5/16	.095	.095	1/2	3/16	7/32	3/32	3/64	5/64	35
CPS2-63203	6-32	5/16	5/16	.095	.095	9/16	1/4	7/32	3/32	3/64	5/64	35
CPS2-63204	6-32	5/16	5/16	.095	.095	5/8	5/16	7/32	3/32	3/64	5/64	35
CPS2-63205	6-32	5/16	5/16	.095	.095	11/16	3/8	7/32	3/32	3/64	5/64	35
CPS2-63206	6-32	5/16	5/16	.095	.095	3/4	7/16	7/32	3/32	3/64	5/64	35
CPS2-63207	6-32	5/16	5/16	.095	.095	13/16	1/2	7/32	3/32	3/64	5/64	35
CPS2-63208	6-32	5/16	5/16	.095	.095	7/8	9/16	7/32	3/32	3/64	5/64	35
CPS2-63209	6-32	5/16	5/16	.095	.095	15/16	5/8	7/32	3/32	3/64	5/64	35
CPS2-63210	6-32	5/16	5/16	.095	.095	1	11/16	7/32	3/32	3/64	5/64	35
CPS2-63211	6-32	5/16	5/16	.095	.095	1-1/16	3/4	7/32	3/32	3/64	5/64	35
CPS2-63212	6-32	5/16	5/16	.095	.095	1-1/8	13/16	7/32	3/32	3/64	5/64	35
CPS2-63213	6-32	5/16	5/16	.095	.095	1-3/16	7/8	7/32	3/32	3/64	5/64	35
CPS2-63214	6-32	5/16	5/16	.095	.095	1-1/4	15/16	7/32	3/32	3/64	5/64	35

Custom modified products are available.

CAPTIVE PANEL SCREW
STYLE 2 American Standard

Captive Screw	Captive Screw Retainer
Style 1	Style 2,3,4,5
Style 2	Style 1
Style 3	Style 6,7

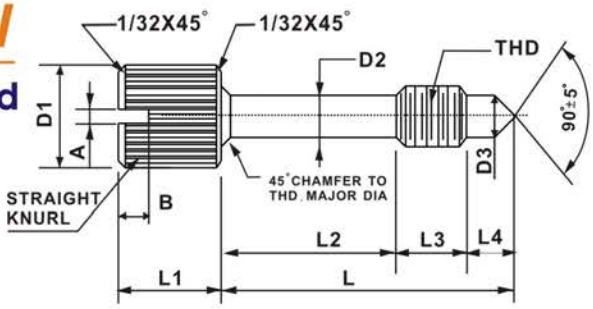

Part No.	Thread	D1 +.015 -.000	L1 +.010 -.010	D2 +.005 -.005	D3 +.000 -.010	L +.015 -.015	L2 +.010 -.010	L3 +.000 -.015	L4 +.015 -.015	A +.005 -.000	B +.010 -.000	KNURL TPI
CPS2-83201	8-32	5/16	5/16	.120	.120	7/16	1/8	7/32	3/32	3/64	5/64	35
CPS2-83202	8-32	5/16	5/16	.120	.120	1/2	3/16	7/32	3/32	3/64	5/64	35
CPS2-83203	8-32	5/16	5/16	.120	.120	9/16	1/4	7/32	3/32	3/64	5/64	35
CPS2-83204	8-32	5/16	5/16	.120	.120	5/8	5/16	7/32	3/32	3/64	5/64	35
CPS2-83205	8-32	5/16	5/16	.120	.120	11/16	3/8	7/32	3/32	3/64	5/64	35
CPS2-83206	8-32	5/16	5/16	.120	.120	3/4	7/16	7/32	3/32	3/64	5/64	35
CPS2-83207	8-32	5/16	5/16	.120	.120	13/16	1/2	7/32	3/32	3/64	5/64	35
CPS2-83208	8-32	5/16	5/16	.120	.120	7/8	9/16	7/32	3/32	3/64	5/64	35
CPS2-83209	8-32	5/16	5/16	.120	.120	15/16	5/8	7/32	3/32	3/64	5/64	35
CPS2-83210	8-32	5/16	5/16	.120	.120	1	11/16	7/32	3/32	3/64	5/64	35
CPS2-83211	8-32	5/16	5/16	.120	.120	1-1/16	3/4	7/32	3/32	3/64	5/64	35
CPS2-83212	8-32	5/16	5/16	.120	.120	1-1/8	13/16	7/32	3/32	3/64	5/64	35
CPS2-83213	8-32	5/16	5/16	.120	.120	1-3/16	7/8	7/32	3/32	3/64	5/64	35
CPS2-83214	8-32	5/16	5/16	.120	.120	1-1/4	15/16	7/32	3/32	3/64	5/64	35
CPS2-102401	10-24	3/8	7/16	.130	.130	1/2	3/32	1/4	5/32	1/16	3/32	35
CPS2-102402	10-24	3/8	7/16	.130	.130	9/16	5/32	1/4	5/32	1/16	3/32	35
CPS2-102403	10-24	3/8	7/16	.130	.130	5/8	7/32	1/4	5/32	1/16	3/32	35
CPS2-102404	10-24	3/8	7/16	.130	.130	11/16	9/32	1/4	5/32	1/16	3/32	35
CPS2-102405	10-24	3/8	7/16	.130	.130	3/4	11/32	1/4	5/32	1/16	3/32	35
CPS2-102406	10-24	3/8	7/16	.130	.130	13/16	13/32	1/4	5/32	1/16	3/32	35
CPS2-102407	10-24	3/8	7/16	.130	.130	7/8	15/32	1/4	5/32	1/16	3/32	35
CPS2-102408	10-24	3/8	7/16	.130	.130	15/16	17/32	1/4	5/32	1/16	3/32	35
CPS2-102409	10-24	3/8	7/16	.130	.130	1	19/32	1/4	5/32	1/16	3/32	35
CPS2-102410	10-24	3/8	7/16	.130	.130	1-1/16	21/32	1/4	5/32	1/16	3/32	35
CPS2-102411	10-24	3/8	7/16	.130	.130	1-1/8	23/32	1/4	5/32	1/16	3/32	35
CPS2-102412	10-24	3/8	7/16	.130	.130	1-3/16	25/32	1/4	5/32	1/16	3/32	35
CPS2-102413	10-24	3/8	7/16	.130	.130	1-1/4	27/32	1/4	5/32	1/16	3/32	35
CPS2-102414	10-24	3/8	7/16	.130	.130	1-5/16	29/32	1/4	5/32	1/16	3/32	35
CPS2-102415	10-24	3/8	7/16	.130	.130	1-3/8	31/32	1/4	5/32	1/16	3/32	35
CPS2-102416	10-24	3/8	7/16	.130	.130	1-7/16	1-1/32	1/4	5/32	1/16	3/32	35
CPS2-102417	10-24	3/8	7/16	.130	.130	1-1/2	1-3/32	1/4	5/32	1/16	3/32	35
CPS2-102418	10-24	3/8	7/16	.130	.130	1-9/16	1-5/32	1/4	5/32	1/16	3/32	35
CPS2-102419	10-24	3/8	7/16	.130	.130	1-5/8	1-7/32	1/4	5/32	1/16	3/32	35
CPS2-102420	10-24	3/8	7/16	.130	.130	1-11/16	1-9/32	1/4	5/32	1/16	3/32	35
CPS2-102421	10-24	3/8	7/16	.130	.130	1-3/4	1-11/32	1/4	5/32	1/16	3/32	35
CPS2-102422	10-24	3/8	7/16	.130	.130	1-13/16	1-13/32	1/4	5/32	1/16	3/32	35
CPS2-102423	10-24	3/8	7/16	.130	.130	1-7/8	1-15/32	1/4	5/32	1/16	3/32	35
CPS2-102424	10-24	3/8	7/16	.130	.130	1-15/16	1-17/32	1/4	5/32	1/16	3/32	35
CPS2-102425	10-24	3/8	7/16	.130	.130	2	1-19/32	1/4	5/32	1/16	3/32	35

Custom modified products are available.

CAPTIVE PANEL SCREW
STYLE 2 American Standard

Captive Screw	Captive Screw Retainer
Style 1	Style 2,3,4,5
Style 2	Style 1
Style 3	Style 6,7

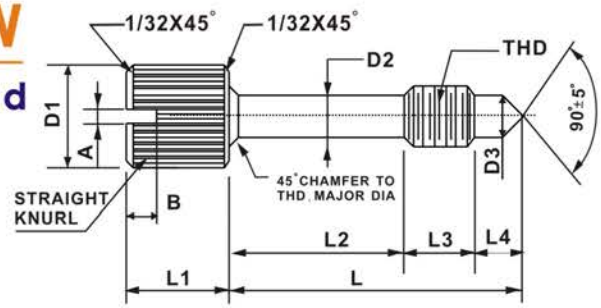

Part No.	Thread	D1 +.015 -.000	L1 +.010 -.010	D2 +.005 -.005	D3 +.000 -.010	L +.015 -.015	L2 +.010 -.010	L3 +.000 -.015	L4 +.015 -.015	A +.005 -.000	B +.010 -.000	KNURL TPI
CPS2-103201	10-32	3/8	7/16	.130	.130	1/2	3/32	1/4	5/32	1/16	3/32	35
CPS2-103202	10-32	3/8	7/16	.130	.130	9/16	5/32	1/4	5/32	1/16	3/32	35
CPS2-103203	10-32	3/8	7/16	.130	.130	5/8	7/32	1/4	5/32	1/16	3/32	35
CPS2-103204	10-32	3/8	7/16	.130	.130	11/16	9/32	1/4	5/32	1/16	3/32	35
CPS2-103205	10-32	3/8	7/16	.130	.130	3/4	11/32	1/4	5/32	1/16	3/32	35
CPS2-103206	10-32	3/8	7/16	.130	.130	13/16	13/32	1/4	5/32	1/16	3/32	35
CPS2-103207	10-32	3/8	7/16	.130	.130	7/8	15/32	1/4	5/32	1/16	3/32	35
CPS2-103208	10-32	3/8	7/16	.130	.130	15/16	17/32	1/4	5/32	1/16	3/32	35
CPS2-103209	10-32	3/8	7/16	.130	.130	1	19/32	1/4	5/32	1/16	3/32	35
CPS2-103210	10-32	3/8	7/16	.130	.130	1-1/16	21/32	1/4	5/32	1/16	3/32	35
CPS2-103211	10-32	3/8	7/16	.130	.130	1-1/8	23/32	1/4	5/32	1/16	3/32	35
CPS2-103212	10-32	3/8	7/16	.130	.130	1-3/16	25/32	1/4	5/32	1/16	3/32	35
CPS2-103213	10-32	3/8	7/16	.130	.130	1-1/4	27/32	1/4	5/32	1/16	3/32	35
CPS2-103214	10-32	3/8	7/16	.130	.130	1-5/16	29/32	1/4	5/32	1/16	3/32	35
CPS2-103215	10-32	3/8	7/16	.130	.130	1-3/8	31/32	1/4	5/32	1/16	3/32	35
CPS2-103216	10-32	3/8	7/16	.130	.130	1-7/16	1-1/32	1/4	5/32	1/16	3/32	35
CPS2-103217	10-32	3/8	7/16	.130	.130	1-1/2	1-3/32	1/4	5/32	1/16	3/32	35
CPS2-103218	10-32	3/8	7/16	.130	.130	1-9/16	1-5/32	1/4	5/32	1/16	3/32	35
CPS2-103219	10-32	3/8	7/16	.130	.130	1-5/8	1-7/32	1/4	5/32	1/16	3/32	35
CPS2-103220	10-32	3/8	7/16	.130	.130	1-11/16	1-9/32	1/4	5/32	1/16	3/32	35
CPS2-103221	10-32	3/8	7/16	.130	.130	1-3/4	1-11/32	1/4	5/32	1/16	3/32	35
CPS2-103222	10-32	3/8	7/16	.130	.130	1-13/16	1-13/32	1/4	5/32	1/16	3/32	35
CPS2-103223	10-32	3/8	7/16	.130	.130	1-7/8	1-15/32	1/4	5/32	1/16	3/32	35
CPS2-103224	10-32	3/8	7/16	.130	.130	1-15/16	1-17/32	1/4	5/32	1/16	3/32	35
CPS2-103225	10-32	3/8	7/16	.130	.130	2	1-19/32	1/4	5/32	1/16	3/32	35
CPS2-142001	1/4-20	1/2	9/16	.175	.175	5/8	1/8	5/16	3/16	5/64	3/32	30
CPS2-142002	1/4-20	1/2	9/16	.175	.175	11/16	3/16	5/16	3/16	5/64	3/32	30
CPS2-142003	1/4-20	1/2	9/16	.175	.175	3/4	1/4	5/16	3/16	5/64	3/32	30
CPS2-142004	1/4-20	1/2	9/16	.175	.175	13/16	5/16	5/16	3/16	5/64	3/32	30
CPS2-142005	1/4-20	1/2	9/16	.175	.175	7/8	3/8	5/16	3/16	5/64	3/32	30
CPS2-142006	1/4-20	1/2	9/16	.175	.175	15/16	7/16	5/16	3/16	5/64	3/32	30
CPS2-142007	1/4-20	1/2	9/16	.175	.175	1	1/2	5/16	3/16	5/64	3/32	30
CPS2-142008	1/4-20	1/2	9/16	.175	.175	1-1/16	9/16	5/16	3/16	5/64	3/32	30
CPS2-142009	1/4-20	1/2	9/16	.175	.175	1-1/8	5/8	5/16	3/16	5/64	3/32	30
CPS2-142010	1/4-20	1/2	9/16	.175	.175	1-3/16	11/16	5/16	3/16	5/64	3/32	30
CPS2-142011	1/4-20	1/2	9/16	.175	.175	1-1/4	3/4	5/16	3/16	5/64	3/32	30
CPS2-142012	1/4-20	1/2	9/16	.175	.175	1-5/16	13/16	5/16	3/16	5/64	3/32	30
CPS2-142013	1/4-20	1/2	9/16	.175	.175	1-3/8	7/8	5/16	3/16	5/64	3/32	30
CPS2-142014	1/4-20	1/2	9/16	.175	.175	1-7/16	15/16	5/16	3/16	5/64	3/32	30
CPS2-142015	1/4-20	1/2	9/16	.175	.175	1-1/2	1	5/16	3/16	5/64	3/32	30
CPS2-142016	1/4-20	1/2	9/16	.175	.175	1-9/16	1-1/16	5/16	3/16	5/64	3/32	30
CPS2-142017	1/4-20	1/2	9/16	.175	.175	1-5/8	1-1/8	5/16	3/16	5/64	3/32	30
CPS2-142018	1/4-20	1/2	9/16	.175	.175	1-11/16	1-3/16	5/16	3/16	5/64	3/32	30
CPS2-142019	1/4-20	1/2	9/16	.175	.175	1-3/4	1-1/4	5/16	3/16	5/64	3/32	30
CPS2-142020	1/4-20	1/2	9/16	.175	.175	1-13/16	1-5/16	5/16	3/16	5/64	3/32	30
CPS2-142021	1/4-20	1/2	9/16	.175	.175	1-7/8	1-3/8	5/16	3/16	5/64	3/32	30
CPS2-142022	1/4-20	1/2	9/16	.175	.175	1-15/16	1-7/16	5/16	3/16	5/64	3/32	30
CPS2-142023	1/4-20	1/2	9/16	.175	.175	2	1-1/2	5/16	3/16	5/64	3/32	30

Custom modified products are available.

CAPTIVE PANEL SCREW
STYLE 2 American Standard

Captive Screw	Captive Screw Retainer
Style 1	Style 2,3,4,5
Style 2	Style 1
Style 3	Style 6,7

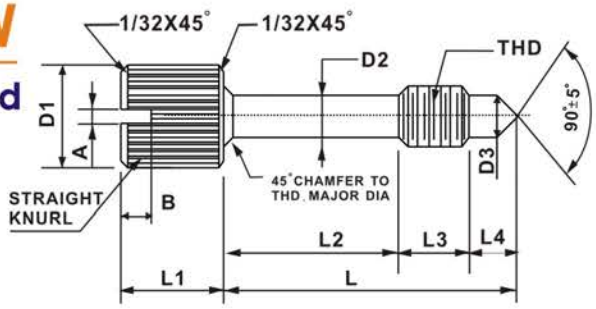

Part No.	Thread	D1 +.015 -.000	L1 +.010 -.010	D2 +.005 -.005	D3 +.000 -.010	L +.015 -.015	L2 +.010 -.010	L3 +.000 -.015	L4 +.015 -.015	A +.005 -.000	B +.010 -.000	KNURL TPI
CPS2-142801	1/4-28	1/2	9/16	.175	.175	5/8	1/8	5/16	3/16	5/64	3/32	30
CPS2-142802	1/4-28	1/2	9/16	.175	.175	11/16	3/16	5/16	3/16	5/64	3/32	30
CPS2-142803	1/4-28	1/2	9/16	.175	.175	3/4	1/4	5/16	3/16	5/64	3/32	30
CPS2-142804	1/4-28	1/2	9/16	.175	.175	13/16	5/16	5/16	3/16	5/64	3/32	30
CPS2-142805	1/4-28	1/2	9/16	.175	.175	7/8	3/8	5/16	3/16	5/64	3/32	30
CPS2-142806	1/4-28	1/2	9/16	.175	.175	15/16	7/16	5/16	3/16	5/64	3/32	30
CPS2-142807	1/4-28	1/2	9/16	.175	.175	1	1/2	5/16	3/16	5/64	3/32	30
CPS2-142808	1/4-28	1/2	9/16	.175	.175	1-1/16	9/16	5/16	3/16	5/64	3/32	30
CPS2-142809	1/4-28	1/2	9/16	.175	.175	1-1/8	5/8	5/16	3/16	5/64	3/32	30
CPS2-142810	1/4-28	1/2	9/16	.175	.175	1-3/16	11/16	5/16	3/16	5/64	3/32	30
CPS2-142811	1/4-28	1/2	9/16	.175	.175	1-1/4	3/4	5/16	3/16	5/64	3/32	30
CPS2-142812	1/4-28	1/2	9/16	.175	.175	1-5/16	13/16	5/16	3/16	5/64	3/32	30
CPS2-142813	1/4-28	1/2	9/16	.175	.175	1-3/8	7/8	5/16	3/16	5/64	3/32	30
CPS2-142814	1/4-28	1/2	9/16	.175	.175	1-7/16	15/16	5/16	3/16	5/64	3/32	30
CPS2-142815	1/4-28	1/2	9/16	.175	.175	1-1/2	1	5/16	3/16	5/64	3/32	30
CPS2-142816	1/4-28	1/2	9/16	.175	.175	1-9/16	1-1/16	5/16	3/16	5/64	3/32	30
CPS2-142817	1/4-28	1/2	9/16	.175	.175	1-5/8	1-1/8	5/16	3/16	5/64	3/32	30
CPS2-142818	1/4-28	1/2	9/16	.175	.175	1-11/16	1-3/16	5/16	3/16	5/64	3/32	30
CPS2-142819	1/4-28	1/2	9/16	.175	.175	1-3/4	1-1/4	5/16	3/16	5/64	3/32	30
CPS2-142820	1/4-28	1/2	9/16	.175	.175	1-13/16	1-5/16	5/16	3/16	5/64	3/32	30
CPS2-142821	1/4-28	1/2	9/16	.175	.175	1-7/8	1-3/8	5/16	3/16	5/64	3/32	30
CPS2-142822	1/4-28	1/2	9/16	.175	.175	1-15/16	1-7/16	5/16	3/16	5/64	3/32	30
CPS2-142823	1/4-28	1/2	9/16	.175	.175	2	1-1/2	5/16	3/16	5/64	3/32	30
CPS2-5161801	5/16-18	5/8	11/16	.230	.230	7/8	1/4	3/8	1/4	3/32	1/8	30
CPS2-5161802	5/16-18	5/8	11/16	.230	.230	15/16	5/16	3/8	1/4	3/32	1/8	30
CPS2-5161803	5/16-18	5/8	11/16	.230	.230	1	3/8	3/8	1/4	3/32	1/8	30
CPS2-5161804	5/16-18	5/8	11/16	.230	.230	1-1/16	7/16	3/8	1/4	3/32	1/8	30
CPS2-5161805	5/16-18	5/8	11/16	.230	.230	1-1/8	1/2	3/8	1/4	3/32	1/8	30
CPS2-5161806	5/16-18	5/8	11/16	.230	.230	1-3/16	9/16	3/8	1/4	3/32	1/8	30
CPS2-5161807	5/16-18	5/8	11/16	.230	.230	1-1/4	5/8	3/8	1/4	3/32	1/8	30
CPS2-5161808	5/16-18	5/8	11/16	.230	.230	1-5/16	11/16	3/8	1/4	3/32	1/8	30
CPS2-5161809	5/16-18	5/8	11/16	.230	.230	1-3/8	3/4	3/8	1/4	3/32	1/8	30
CPS2-5161810	5/16-18	5/8	11/16	.230	.230	1-7/16	13/16	3/8	1/4	3/32	1/8	30
CPS2-5161811	5/16-18	5/8	11/16	.230	.230	1-1/2	7/8	3/8	1/4	3/32	1/8	30
CPS2-5161812	5/16-18	5/8	11/16	.230	.230	1-9/16	15/16	3/8	1/4	3/32	1/8	30
CPS2-5161813	5/16-18	5/8	11/16	.230	.230	1-5/8	1	3/8	1/4	3/32	1/8	30
CPS2-5161814	5/16-18	5/8	11/16	.230	.230	1-11/16	1-1/16	3/8	1/4	3/32	1/8	30
CPS2-5161815	5/16-18	5/8	11/16	.230	.230	1-3/4	1-1/8	3/8	1/4	3/32	1/8	30
CPS2-5161816	5/16-18	5/8	11/16	.230	.230	1-13/16	1-3/16	3/8	1/4	3/32	1/8	30
CPS2-5161817	5/16-18	5/8	11/16	.230	.230	1-7/8	1-1/4	3/8	1/4	3/32	1/8	30
CPS2-5161818	5/16-18	5/8	11/16	.230	.230	1-15/16	1-5/16	3/8	1/4	3/32	1/8	30
CPS2-5161819	5/16-18	5/8	11/16	.230	.230	2	1-3/8	3/8	1/4	3/32	1/8	30

Custom modified products are available.

CAPTIVE PANEL SCREW
STYLE 2 American Standard

Captive Screw	Captive Screw Retainer
Style 1	Style 2,3,4,5
Style 2	Style 1
Style 3	Style 6,7

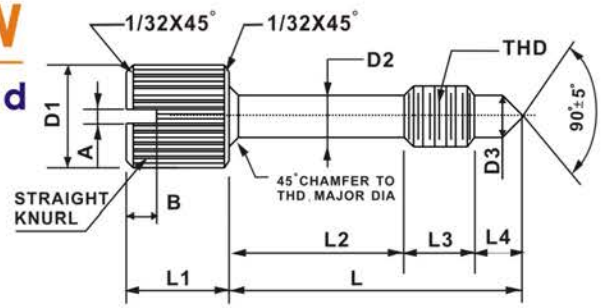

Part No.	Thread	D1	L1	D2	D3	L	L2	L3	L4	A	B	KNURL TPI
		+.015 -.000	+.010 -.010	+.005 -.005	+.000 -.010	+.015 -.015	+.010 -.010	+.000 -.015	+.015 -.015	+.005 -.000	+.010 -.000	
CPS2-5162401	5/16-24	5/8	11/16	.230	.230	7/8	1/4	3/8	1/4	3/32	1/8	30
CPS2-5162402	5/16-24	5/8	11/16	.230	.230	15/16	5/16	3/8	1/4	3/32	1/8	30
CPS2-5162403	5/16-24	5/8	11/16	.230	.230	1	3/8	3/8	1/4	3/32	1/8	30
CPS2-5162404	5/16-24	5/8	11/16	.230	.230	1-1/16	7/16	3/8	1/4	3/32	1/8	30
CPS2-5162405	5/16-24	5/8	11/16	.230	.230	1-1/8	1/2	3/8	1/4	3/32	1/8	30
CPS2-5162406	5/16-24	5/8	11/16	.230	.230	1-3/16	9/16	3/8	1/4	3/32	1/8	30
CPS2-5162407	5/16-24	5/8	11/16	.230	.230	1-1/4	5/8	3/8	1/4	3/32	1/8	30
CPS2-5162408	5/16-24	5/8	11/16	.230	.230	1-5/16	11/16	3/8	1/4	3/32	1/8	30
CPS2-5162409	5/16-24	5/8	11/16	.230	.230	1-3/8	3/4	3/8	1/4	3/32	1/8	30
CPS2-5162410	5/16-24	5/8	11/16	.230	.230	1-7/16	13/16	3/8	1/4	3/32	1/8	30
CPS2-5162411	5/16-24	5/8	11/16	.230	.230	1-1/2	7/8	3/8	1/4	3/32	1/8	30
CPS2-5162412	5/16-24	5/8	11/16	.230	.230	1-9/16	15/16	3/8	1/4	3/32	1/8	30
CPS2-5162413	5/16-24	5/8	11/16	.230	.230	1-5/8	1	3/8	1/4	3/32	1/8	30
CPS2-5162414	5/16-24	5/8	11/16	.230	.230	1-11/16	1-1/16	3/8	1/4	3/32	1/8	30
CPS2-5162415	5/16-24	5/8	11/16	.230	.230	1-3/4	1-1/8	3/8	1/4	3/32	1/8	30
CPS2-5162416	5/16-24	5/8	11/16	.230	.230	1-13/16	1-3/16	3/8	1/4	3/32	1/8	30
CPS2-5162417	5/16-24	5/8	11/16	.230	.230	1-7/8	1-1/4	3/8	1/4	3/32	1/8	30
CPS2-5162418	5/16-24	5/8	11/16	.230	.230	1-15/16	1-5/16	3/8	1/4	3/32	1/8	30
CPS2-5162419	5/16-24	5/8	11/16	.230	.230	2	1-3/8	3/8	1/4	3/32	1/8	30
CPS2-381601	3/8-16	5/8	11/16	.280	.280	1	3/8	3/8	1/4	3/32	1/8	30
CPS2-381602	3/8-16	5/8	11/16	.280	.280	1-1/16	7/16	3/8	1/4	3/32	1/8	30
CPS2-381603	3/8-16	5/8	11/16	.280	.280	1-1/8	1/2	3/8	1/4	3/32	1/8	30
CPS2-381604	3/8-16	5/8	11/16	.280	.280	1-3/16	9/16	3/8	1/4	3/32	1/8	30
CPS2-381605	3/8-16	5/8	11/16	.280	.280	1-1/4	5/8	3/8	1/4	3/32	1/8	30
CPS2-381606	3/8-16	5/8	11/16	.280	.280	1-5/16	11/16	3/8	1/4	3/32	1/8	30
CPS2-381607	3/8-16	5/8	11/16	.280	.280	1-3/8	3/4	3/8	1/4	3/32	1/8	30
CPS2-381608	3/8-16	5/8	11/16	.280	.280	1-7/16	13/16	3/8	1/4	3/32	1/8	30
CPS2-381609	3/8-16	5/8	11/16	.280	.280	1-1/2	7/8	3/8	1/4	3/32	1/8	30
CPS2-381610	3/8-16	5/8	11/16	.280	.280	1-9/16	15/16	3/8	1/4	3/32	1/8	30
CPS2-381611	3/8-16	5/8	11/16	.280	.280	1-5/8	1	3/8	1/4	3/32	1/8	30
CPS2-381612	3/8-16	5/8	11/16	.280	.280	1-11/16	1-1/16	3/8	1/4	3/32	1/8	30
CPS2-381613	3/8-16	5/8	11/16	.280	.280	1-3/4	1-1/8	3/8	1/4	3/32	1/8	30
CPS2-381614	3/8-16	5/8	11/16	.280	.280	1-13/16	1-3/16	3/8	1/4	3/32	1/8	30
CPS2-381615	3/8-16	5/8	11/16	.280	.280	1-7/8	1-1/4	3/8	1/4	3/32	1/8	30
CPS2-381616	3/8-16	5/8	11/16	.280	.280	1-15/16	1-5/16	3/8	1/4	3/32	1/8	30
CPS2-381617	3/8-16	5/8	11/16	.280	.280	2	1-3/8	3/8	1/4	3/32	1/8	30

Custom modified products are available.

CAPTIVE PANEL SCREW
STYLE 3 American Standard

Captive Screw	Captive Screw Retainer
Style 1	Style 2,3,4,5
Style 2	Style 1
Style 3	Style 6,7

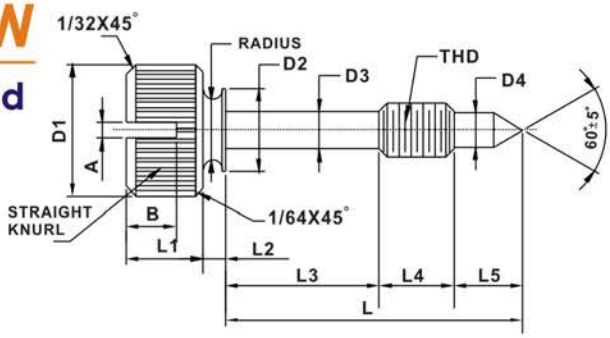

Part No.	Thread	D1 +.015 -.000	L1 +.010 -.010	D2 +.010 -.010	D3 +.005 -.005	D4 +.000 -.010	L +.015 -.015	L2 +.010 -.010	L3 +.010 -.010	L4 +.010 -.010	L5 +.015 -.015	A +.005 -.000	B +.010 -.000	KNURL TPI
CPS3-44001	4-40	1/4	1/8	13/64	.078	.078	1/2	1/16	3/16	3/16	1/8	3/64	1/16	35
CPS3-44002	4-40	1/4	1/8	13/64	.078	.078	9/16	1/16	1/4	3/16	1/8	3/64	1/16	35
CPS3-44003	4-40	1/4	1/8	13/64	.078	.078	5/8	1/16	5/16	3/16	1/8	3/64	1/16	35
CPS3-44004	4-40	1/4	1/8	13/64	.078	.078	11/16	1/16	3/8	3/16	1/8	3/64	1/16	35
CPS3-44005	4-40	1/4	1/8	13/64	.078	.078	3/4	1/16	7/16	3/16	1/8	3/64	1/16	35
CPS3-44006	4-40	1/4	1/8	13/64	.078	.078	13/16	1/16	1/2	3/16	1/8	3/64	1/16	35
CPS3-44007	4-40	1/4	1/8	13/64	.078	.078	7/8	1/16	9/16	3/16	1/8	3/64	1/16	35
CPS3-44008	4-40	1/4	1/8	13/64	.078	.078	15/16	1/16	5/8	3/16	1/8	3/64	1/16	35
CPS3-44009	4-40	1/4	1/8	13/64	.078	.078	1	1/16	11/16	3/16	1/8	3/64	1/16	35
CPS3-44010	4-40	5/16	1/8	13/64	.078	.078	1/2	1/16	3/16	3/16	1/8	3/64	1/16	35
CPS3-44011	4-40	5/16	1/8	13/64	.078	.078	9/16	1/16	1/4	3/16	1/8	3/64	1/16	35
CPS3-44012	4-40	5/16	1/8	13/64	.078	.078	5/8	1/16	5/16	3/16	1/8	3/64	1/16	35
CPS3-44013	4-40	5/16	1/8	13/64	.078	.078	11/16	1/16	3/8	3/16	1/8	3/64	1/16	35
CPS3-44014	4-40	5/16	1/8	13/64	.078	.078	3/4	1/16	7/16	3/16	1/8	3/64	1/16	35
CPS3-44015	4-40	5/16	1/8	13/64	.078	.078	13/16	1/16	1/2	3/16	1/8	3/64	1/16	35
CPS3-44016	4-40	5/16	1/8	13/64	.078	.078	7/8	1/16	9/16	3/16	1/8	3/64	1/16	35
CPS3-44017	4-40	5/16	1/8	13/64	.078	.078	15/16	1/16	5/8	3/16	1/8	3/64	1/16	35
CPS3-44018	4-40	5/16	1/8	13/64	.078	.078	1	1/16	11/16	3/16	1/8	3/64	1/16	35
CPS3-63201	6-32	5/16	1/8	13/64	.095	.095	1/2	1/16	3/16	3/16	1/8	3/64	1/16	35
CPS3-63202	6-32	5/16	1/8	13/64	.095	.095	9/16	1/16	1/4	3/16	1/8	3/64	1/16	35
CPS3-63203	6-32	5/16	1/8	13/64	.095	.095	5/8	1/16	5/16	3/16	1/8	3/64	1/16	35
CPS3-63204	6-32	5/16	1/8	13/64	.095	.095	11/16	1/16	3/8	3/16	1/8	3/64	1/16	35
CPS3-63205	6-32	5/16	1/8	13/64	.095	.095	3/4	1/16	7/16	3/16	1/8	3/64	1/16	35
CPS3-63206	6-32	5/16	1/8	13/64	.095	.095	13/16	1/16	1/2	3/16	1/8	3/64	1/16	35
CPS3-63207	6-32	5/16	1/8	13/64	.095	.095	7/8	1/16	9/16	3/16	1/8	3/64	1/16	35
CPS3-63208	6-32	5/16	1/8	13/64	.095	.095	15/16	1/16	5/8	3/16	1/8	3/64	1/16	35
CPS3-63209	6-32	5/16	1/8	13/64	.095	.095	1	1/16	11/16	3/16	1/8	3/64	1/16	35
CPS3-63210	6-32	5/16	1/8	13/64	.095	.095	1-1/16	1/16	3/4	3/16	1/8	3/64	1/16	35
CPS3-63211	6-32	5/16	1/8	13/64	.095	.095	1-1/8	1/16	13/16	3/16	1/8	3/64	1/16	35
CPS3-63212	6-32	5/16	1/8	13/64	.095	.095	1-3/16	1/16	7/8	3/16	1/8	3/64	1/16	35
CPS3-63213	6-32	5/16	1/8	13/64	.095	.095	1-1/4	1/16	15/16	3/16	1/8	3/64	1/16	35
CPS3-63214	6-32	3/8	1/8	13/64	.095	.095	1/2	1/16	3/16	3/16	1/8	3/64	1/16	35
CPS3-63215	6-32	3/8	1/8	13/64	.095	.095	9/16	1/16	1/4	3/16	1/8	3/64	1/16	35
CPS3-63216	6-32	3/8	1/8	13/64	.095	.095	5/8	1/16	5/16	3/16	1/8	3/64	1/16	35
CPS3-63217	6-32	3/8	1/8	13/64	.095	.095	11/16	1/16	3/8	3/16	1/8	3/64	1/16	35
CPS3-63218	6-32	3/8	1/8	13/64	.095	.095	3/4	1/16	7/16	3/16	1/8	3/64	1/16	35
CPS3-63219	6-32	3/8	1/8	13/64	.095	.095	13/16	1/16	1/2	3/16	1/8	3/64	1/16	35
CPS3-63220	6-32	3/8	1/8	13/64	.095	.095	7/8	1/16	9/16	3/16	1/8	3/64	1/16	35
CPS3-63221	6-32	3/8	1/8	13/64	.095	.095	15/16	1/16	5/8	3/16	1/8	3/64	1/16	35
CPS3-63222	6-32	3/8	1/8	13/64	.095	.095	1	1/16	11/16	3/16	1/8	3/64	1/16	35
CPS3-63223	6-32	3/8	1/8	13/64	.095	.095	1-1/16	1/16	3/4	3/16	1/8	3/64	1/16	35
CPS3-63224	6-32	3/8	1/8	13/64	.095	.095	1-1/8	1/16	13/16	3/16	1/8	3/64	1/16	35
CPS3-63225	6-32	3/8	1/8	13/64	.095	.095	1-3/16	1/16	7/8	3/16	1/8	3/64	1/16	35
CPS3-63226	6-32	3/8	1/8	13/64	.095	.095	1-1/4	1/16	15/16	3/16	1/8	3/64	1/16	35

Custom modified products are available.

CAPTIVE PANEL SCREW
STYLE 3 American Standard

Captive Screw	Captive Screw Retainer
Style 1	Style 2,3,4,5
Style 2	Style 1
Style 3	Style 6,7

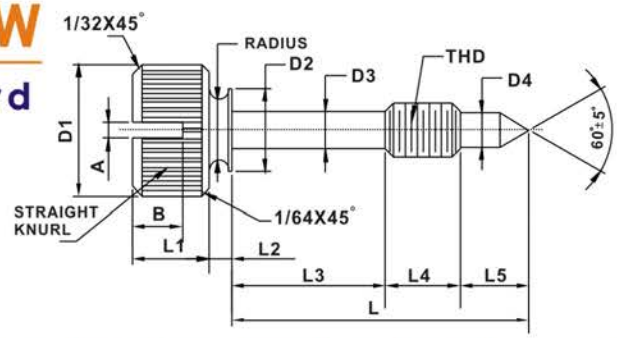

Part No.	Thread	D1 +.015 -.000	L1 +.010 -.010	D2 +.010 -.010	D3 +.005 -.005	D4 +.000 -.010	L +.015 -.015	L2 +.010 -.010	L3 +.010 -.010	L4 +.010 -.010	L5 +.015 -.015	A +.005 -.000	B +.010 -.000	KNURL TPI
CPS3-83201	8-32	1/2	3/16	13/32	.120	.120	1/2	1/16	1/8	1/4	1/8	1/16	3/32	30
CPS3-83202	8-32	1/2	3/16	13/32	.120	.120	9/16	1/16	3/16	1/4	1/8	1/16	3/32	30
CPS3-83203	8-32	1/2	3/16	13/32	.120	.120	5/8	1/16	1/4	1/4	1/8	1/16	3/32	30
CPS3-83204	8-32	1/2	3/16	13/32	.120	.120	11/16	1/16	5/16	1/4	1/8	1/16	3/32	30
CPS3-83205	8-32	1/2	3/16	13/32	.120	.120	3/4	1/16	3/8	1/4	1/8	1/16	3/32	30
CPS3-83206	8-32	1/2	3/16	13/32	.120	.120	13/16	1/16	7/16	1/4	1/8	1/16	3/32	30
CPS3-83207	8-32	1/2	3/16	13/32	.120	.120	7/8	1/16	1/2	1/4	1/8	1/16	3/32	30
CPS3-83208	8-32	1/2	3/16	13/32	.120	.120	15/16	1/16	9/16	1/4	1/8	1/16	3/32	30
CPS3-83209	8-32	1/2	3/16	13/32	.120	.120	1	1/16	5/8	1/4	1/8	1/16	3/32	30
CPS3-83210	8-32	1/2	3/16	13/32	.120	.120	1-1/16	1/16	11/16	1/4	1/8	1/16	3/32	30
CPS3-83211	8-32	1/2	3/16	13/32	.120	.120	1-1/8	1/16	3/4	1/4	1/8	1/16	3/32	30
CPS3-83212	8-32	1/2	3/16	13/32	.120	.120	1-3/16	1/16	13/16	1/4	1/8	1/16	3/32	30
CPS3-83213	8-32	1/2	3/16	13/32	.120	.120	1-1/4	1/16	7/8	1/4	1/8	1/16	3/32	30
CPS3-83214	8-32	1/2	3/16	13/32	.120	.120	1-5/16	1/16	15/16	1/4	1/8	1/16	3/32	30
CPS3-83215	8-32	1/2	3/16	13/32	.120	.120	1-3/8	1/16	1	1/4	1/8	1/16	3/32	30
CPS3-83216	8-32	1/2	3/16	13/32	.120	.120	1-7/16	1/16	1-1/16	1/4	1/8	1/16	3/32	30
CPS3-83217	8-32	1/2	3/16	13/32	.120	.120	1-1/2	1/16	1-1/8	1/4	1/8	1/16	3/32	30
CPS3-83218	8-32	5/8	3/16	1/2	.120	.120	1/2	1/16	1/8	1/4	1/8	1/16	3/32	30
CPS3-83219	8-32	5/8	3/16	1/2	.120	.120	9/16	1/16	3/16	1/4	1/8	1/16	3/32	30
CPS3-83220	8-32	5/8	3/16	1/2	.120	.120	5/8	1/16	1/4	1/4	1/8	1/16	3/32	30
CPS3-83221	8-32	5/8	3/16	1/2	.120	.120	11/16	1/16	5/16	1/4	1/8	1/16	3/32	30
CPS3-83222	8-32	5/8	3/16	1/2	.120	.120	3/4	1/16	3/8	1/4	1/8	1/16	3/32	30
CPS3-83223	8-32	5/8	3/16	1/2	.120	.120	13/16	1/16	7/16	1/4	1/8	1/16	3/32	30
CPS3-83224	8-32	5/8	3/16	1/2	.120	.120	7/8	1/16	1/2	1/4	1/8	1/16	3/32	30
CPS3-83225	8-32	5/8	3/16	1/2	.120	.120	15/16	1/16	9/16	1/4	1/8	1/16	3/32	30
CPS3-83226	8-32	5/8	3/16	1/2	.120	.120	1	1/16	5/8	1/4	1/8	1/16	3/32	30
CPS3-83227	8-32	5/8	3/16	1/2	.120	.120	1-1/16	1/16	11/16	1/4	1/8	1/16	3/32	30
CPS3-83228	8-32	5/8	3/16	1/2	.120	.120	1-1/8	1/16	3/4	1/4	1/8	1/16	3/32	30
CPS3-83229	8-32	5/8	3/16	1/2	.120	.120	1-3/16	1/16	13/16	1/4	1/8	1/16	3/32	30
CPS3-83230	8-32	5/8	3/16	1/2	.120	.120	1-1/4	1/16	7/8	1/4	1/8	1/16	3/32	30
CPS3-83231	8-32	5/8	3/16	1/2	.120	.120	1-5/16	1/16	15/16	1/4	1/8	1/16	3/32	30
CPS3-83232	8-32	5/8	3/16	1/2	.120	.120	1-3/8	1/16	1	1/4	1/8	1/16	3/32	30
CPS3-83233	8-32	5/8	3/16	1/2	.120	.120	1-7/16	1/16	1-1/16	1/4	1/8	1/16	3/32	30
CPS3-83234	8-32	5/8	3/16	1/2	.120	.120	1-1/2	1/16	1-1/8	1/4	1/8	1/16	3/32	30
CPS3-102401	10-24	1/2	3/16	13/32	.130	.130	1/2	1/16	1/8	1/4	1/8	1/16	3/32	30
CPS3-102402	10-24	1/2	3/16	13/32	.130	.130	9/16	1/16	3/16	1/4	1/8	1/16	3/32	30
CPS3-102403	10-24	1/2	3/16	13/32	.130	.130	5/8	1/16	1/4	1/4	1/8	1/16	3/32	30
CPS3-102404	10-24	1/2	3/16	13/32	.130	.130	11/16	1/16	5/16	1/4	1/8	1/16	3/32	30
CPS3-102405	10-24	1/2	3/16	13/32	.130	.130	3/4	1/16	3/8	1/4	1/8	1/16	3/32	30
CPS3-102406	10-24	1/2	3/16	13/32	.130	.130	13/16	1/16	7/16	1/4	1/8	1/16	3/32	30
CPS3-102407	10-24	1/2	3/16	13/32	.130	.130	7/8	1/16	1/2	1/4	1/8	1/16	3/32	30
CPS3-102408	10-24	1/2	3/16	13/32	.130	.130	15/16	1/16	9/16	1/4	1/8	1/16	3/32	30
CPS3-102409	10-24	1/2	3/16	13/32	.130	.130	1	1/16	5/8	1/4	1/8	1/16	3/32	30
CPS3-102410	10-24	1/2	3/16	13/32	.130	.130	1-1/16	1/16	11/16	1/4	1/8	1/16	3/32	30
CPS3-102411	10-24	1/2	3/16	13/32	.130	.130	1-1/8	1/16	3/4	1/4	1/8	1/16	3/32	30
CPS3-102412	10-24	1/2	3/16	13/32	.130	.130	1-3/16	1/16	13/16	1/4	1/8	1/16	3/32	30
CPS3-102413	10-24	1/2	3/16	13/32	.130	.130	1-1/4	1/16	7/8	1/4	1/8	1/16	3/32	30
CPS3-102414	10-24	1/2	3/16	13/32	.130	.130	1-5/16	1/16	15/16	1/4	1/8	1/16	3/32	30
CPS3-102415	10-24	1/2	3/16	13/32	.130	.130	1-3/8	1/16	1	1/4	1/8	1/16	3/32	30
CPS3-102416	10-24	1/2	3/16	13/32	.130	.130	1-7/16	1/16	1-1/16	1/4	1/8	1/16	3/32	30
CPS3-102417	10-24	1/2	3/16	13/32	.130	.130	1-1/2	1/16	1-1/8	1/4	1/8	1/16	3/32	30

Custom modified products are available.

CAPTIVE PANEL SCREW

STYLE 3 American Standard

Captive Screw	Captive Screw Retainer
Style 1	Style 2,3,4,5
Style 2	Style 1
Style 3	Style 6,7

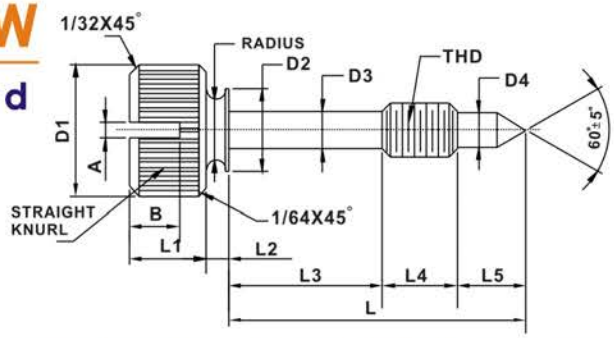

Part No.	Thread	D1 +.015 -.000	L1 +.010 -.010	D2 +.010 -.010	D3 +.005 -.005	D4 +.000 -.010	L +.015 -.015	L2 +.010 -.010	L3 +.010 -.010	L4 +.010 -.010	L5 +.015 -.015	A +.005 -.000	B +.010 -.000	KNURL TPI
CPS3-102418	10-24	5/8	3/16	1/2	.130	.130	1/2	1/16	1/8	1/4	1/8	1/16	3/32	30
CPS3-102419	10-24	5/8	3/16	1/2	.130	.130	9/16	1/16	3/16	1/4	1/8	1/16	3/32	30
CPS3-102420	10-24	5/8	3/16	1/2	.130	.130	5/8	1/16	1/4	1/4	1/8	1/16	3/32	30
CPS3-102421	10-24	5/8	3/16	1/2	.130	.130	11/16	1/16	5/16	1/4	1/8	1/16	3/32	30
CPS3-102422	10-24	5/8	3/16	1/2	.130	.130	3/4	1/16	3/8	1/4	1/8	1/16	3/32	30
CPS3-102423	10-24	5/8	3/16	1/2	.130	.130	13/16	1/16	7/16	1/4	1/8	1/16	3/32	30
CPS3-102424	10-24	5/8	3/16	1/2	.130	.130	7/8	1/16	1/2	1/4	1/8	1/16	3/32	30
CPS3-102425	10-24	5/8	3/16	1/2	.130	.130	15/16	1/16	9/16	1/4	1/8	1/16	3/32	30
CPS3-102426	10-24	5/8	3/16	1/2	.130	.130	1	1/16	5/8	1/4	1/8	1/16	3/32	30
CPS3-102427	10-24	5/8	3/16	1/2	.130	.130	1-1/16	1/16	11/16	1/4	1/8	1/16	3/32	30
CPS3-102428	10-24	5/8	3/16	1/2	.130	.130	1-1/8	1/16	3/4	1/4	1/8	1/16	3/32	30
CPS3-102429	10-24	5/8	3/16	1/2	.130	.130	1-3/16	1/16	13/16	1/4	1/8	1/16	3/32	30
CPS3-102430	10-24	5/8	3/16	1/2	.130	.130	1-1/4	1/16	7/8	1/4	1/8	1/16	3/32	30
CPS3-102431	10-24	5/8	3/16	1/2	.130	.130	1-5/16	1/16	15/16	1/4	1/8	1/16	3/32	30
CPS3-102432	10-24	5/8	3/16	1/2	.130	.130	1-3/8	1/16	1	1/4	1/8	1/16	3/32	30
CPS3-102433	10-24	5/8	3/16	1/2	.130	.130	1-7/16	1/16	1-1/16	1/4	1/8	1/16	3/32	30
CPS3-102434	10-24	5/8	3/16	1/2	.130	.130	1-1/2	1/16	1-1/8	1/4	1/8	1/16	3/32	30
CPS3-103201	10-32	1/2	3/16	13/32	.130	.130	1/2	1/16	1/8	1/4	1/8	1/16	3/32	30
CPS3-103202	10-32	1/2	3/16	13/32	.130	.130	9/16	1/16	3/16	1/4	1/8	1/16	3/32	30
CPS3-103203	10-32	1/2	3/16	13/32	.130	.130	5/8	1/16	1/4	1/4	1/8	1/16	3/32	30
CPS3-103204	10-32	1/2	3/16	13/32	.130	.130	11/16	1/16	5/16	1/4	1/8	1/16	3/32	30
CPS3-103205	10-32	1/2	3/16	13/32	.130	.130	3/4	1/16	3/8	1/4	1/8	1/16	3/32	30
CPS3-103206	10-32	1/2	3/16	13/32	.130	.130	13/16	1/16	7/16	1/4	1/8	1/16	3/32	30
CPS3-103207	10-32	1/2	3/16	13/32	.130	.130	7/8	1/16	1/2	1/4	1/8	1/16	3/32	30
CPS3-103208	10-32	1/2	3/16	13/32	.130	.130	15/16	1/16	9/16	1/4	1/8	1/16	3/32	30
CPS3-103209	10-32	1/2	3/16	13/32	.130	.130	1	1/16	5/8	1/4	1/8	1/16	3/32	30
CPS3-103210	10-32	1/2	3/16	13/32	.130	.130	1-1/16	1/16	11/16	1/4	1/8	1/16	3/32	30
CPS3-103211	10-32	1/2	3/16	13/32	.130	.130	1-1/8	1/16	3/4	1/4	1/8	1/16	3/32	30
CPS3-103212	10-32	1/2	3/16	13/32	.130	.130	1-3/16	1/16	13/16	1/4	1/8	1/16	3/32	30
CPS3-103213	10-32	1/2	3/16	13/32	.130	.130	1-1/4	1/16	7/8	1/4	1/8	1/16	3/32	30
CPS3-103214	10-32	1/2	3/16	13/32	.130	.130	1-5/16	1/16	15/16	1/4	1/8	1/16	3/32	30
CPS3-103215	10-32	1/2	3/16	13/32	.130	.130	1-3/8	1/16	1	1/4	1/8	1/16	3/32	30
CPS3-103216	10-32	1/2	3/16	13/32	.130	.130	1-7/16	1/16	1-1/16	1/4	1/8	1/16	3/32	30
CPS3-103217	10-32	1/2	3/16	13/32	.130	.130	1-1/2	1/16	1-1/8	1/4	1/8	1/16	3/32	30
CPS3-103218	10-32	5/8	3/16	1/2	.130	.130	1/2	1/16	1/8	1/4	1/8	1/16	3/32	30
CPS3-103219	10-32	5/8	3/16	1/2	.130	.130	9/16	1/16	3/16	1/4	1/8	1/16	3/32	30
CPS3-103220	10-32	5/8	3/16	1/2	.130	.130	5/8	1/16	1/4	1/4	1/8	1/16	3/32	30
CPS3-103221	10-32	5/8	3/16	1/2	.130	.130	11/16	1/16	5/16	1/4	1/8	1/16	3/32	30
CPS3-103222	10-32	5/8	3/16	1/2	.130	.130	3/4	1/16	3/8	1/4	1/8	1/16	3/32	30
CPS3-103223	10-32	5/8	3/16	1/2	.130	.130	13/16	1/16	7/16	1/4	1/8	1/16	3/32	30
CPS3-103224	10-32	5/8	3/16	1/2	.130	.130	7/8	1/16	1/2	1/4	1/8	1/16	3/32	30
CPS3-103225	10-32	5/8	3/16	1/2	.130	.130	15/16	1/16	9/16	1/4	1/8	1/16	3/32	30
CPS3-103226	10-32	5/8	3/16	1/2	.130	.130	1	1/16	5/8	1/4	1/8	1/16	3/32	30
CPS3-103227	10-32	5/8	3/16	1/2	.130	.130	1-1/16	1/16	11/16	1/4	1/8	1/16	3/32	30
CPS3-103228	10-32	5/8	3/16	1/2	.130	.130	1-1/8	1/16	3/4	1/4	1/8	1/16	3/32	30
CPS3-103229	10-32	5/8	3/16	1/2	.130	.130	1-3/16	1/16	13/16	1/4	1/8	1/16	3/32	30
CPS3-103230	10-32	5/8	3/16	1/2	.130	.130	1-1/4	1/16	7/8	1/4	1/8	1/16	3/32	30
CPS3-103231	10-32	5/8	3/16	1/2	.130	.130	1-5/16	1/16	15/16	1/4	1/8	1/16	3/32	30
CPS3-103232	10-32	5/8	3/16	1/2	.130	.130	1-3/8	1/16	1	1/4	1/8	1/16	3/32	30
CPS3-103233	10-32	5/8	3/16	1/2	.130	.130	1-7/16	1/16	1-1/16	1/4	1/8	1/16	3/32	30
CPS3-103234	10-32	5/8	3/16	1/2	.130	.130	1-1/2	1/16	1-1/8	1/4	1/8	1/16	3/32	30

Custom modified products are available.

CAPTIVE PANEL SCREW
STYLE 3 American Standard

Captive Screw	Captive Screw Retainer
Style 1	Style 2,3,4,5
Style 2	Style 1
Style 3	Style 6,7

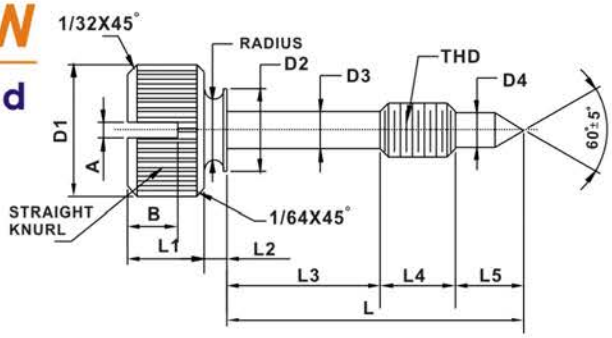

Part No.	Thread	D1	L1	D2	D3	D4	L	L2	L3	L4	L5	A	B	KNURL TPI
		+.015 -.000	+.010 -.010	+.010 -.010	+.005 -.005	+.000 -.010	+.015 -.015	+.010 -.010	+.010 -.010	+.010 -.010	+.015 -.015	+.005 -.000	+.010 -.000	
CPS3-122401	12-24	5/8	3/16	1/2	.150	.150	1/2	1/16	1/8	1/4	1/8	5/64	3/32	30
CPS3-122402	12-24	5/8	3/16	1/2	.150	.150	9/16	1/16	3/16	1/4	1/8	5/64	3/32	30
CPS3-122403	12-24	5/8	3/16	1/2	.150	.150	5/8	1/16	1/4	1/4	1/8	5/64	3/32	30
CPS3-122404	12-24	5/8	3/16	1/2	.150	.150	11/16	1/16	5/16	1/4	1/8	5/64	3/32	30
CPS3-122405	12-24	5/8	3/16	1/2	.150	.150	3/4	1/16	3/8	1/4	1/8	5/64	3/32	30
CPS3-122406	12-24	5/8	3/16	1/2	.150	.150	13/16	1/16	7/16	1/4	1/8	5/64	3/32	30
CPS3-122407	12-24	5/8	3/16	1/2	.150	.150	7/8	1/16	1/2	1/4	1/8	5/64	3/32	30
CPS3-122408	12-24	5/8	3/16	1/2	.150	.150	15/16	1/16	9/16	1/4	1/8	5/64	3/32	30
CPS3-122409	12-24	5/8	3/16	1/2	.150	.150	1	1/16	5/8	1/4	1/8	5/64	3/32	30
CPS3-122410	12-24	5/8	3/16	1/2	.150	.150	1-1/16	1/16	11/16	1/4	1/8	5/64	3/32	30
CPS3-122411	12-24	5/8	3/16	1/2	.150	.150	1-1/8	1/16	3/4	1/4	1/8	5/64	3/32	30
CPS3-122412	12-24	5/8	3/16	1/2	.150	.150	1-3/16	1/16	13/16	1/4	1/8	5/64	3/32	30
CPS3-122413	12-24	5/8	3/16	1/2	.150	.150	1-1/4	1/16	7/8	1/4	1/8	5/64	3/32	30
CPS3-122414	12-24	5/8	3/16	1/2	.150	.150	1-5/16	1/16	15/16	1/4	1/8	5/64	3/32	30
CPS3-122415	12-24	5/8	3/16	1/2	.150	.150	1-3/8	1/16	1	1/4	1/8	5/64	3/32	30
CPS3-122416	12-24	5/8	3/16	1/2	.150	.150	1-7/16	1/16	1-1/16	1/4	1/8	5/64	3/32	30
CPS3-122417	12-24	5/8	3/16	1/2	.150	.150	1-1/2	1/16	1-1/8	1/4	1/8	5/64	3/32	30
CPS3-142001	1/4-20	5/8	3/16	1/2	.175	.175	3/4	1/16	1/8	3/8	1/4	5/64	3/32	30
CPS3-142002	1/4-20	5/8	3/16	1/2	.175	.175	13/16	1/16	3/16	3/8	1/4	5/64	3/32	30
CPS3-142003	1/4-20	5/8	3/16	1/2	.175	.175	7/8	1/16	1/4	3/8	1/4	5/64	3/32	30
CPS3-142004	1/4-20	5/8	3/16	1/2	.175	.175	15/16	1/16	5/16	3/8	1/4	5/64	3/32	30
CPS3-142005	1/4-20	5/8	3/16	1/2	.175	.175	1	1/16	3/8	3/8	1/4	5/64	3/32	30
CPS3-142006	1/4-20	5/8	3/16	1/2	.175	.175	1-1/16	1/16	7/16	3/8	1/4	5/64	3/32	30
CPS3-142007	1/4-20	5/8	3/16	1/2	.175	.175	1-1/8	1/16	1/2	3/8	1/4	5/64	3/32	30
CPS3-142008	1/4-20	5/8	3/16	1/2	.175	.175	1-3/16	1/16	9/16	3/8	1/4	5/64	3/32	30
CPS3-142009	1/4-20	5/8	3/16	1/2	.175	.175	1-1/4	1/16	5/8	3/8	1/4	5/64	3/32	30
CPS3-142010	1/4-20	5/8	3/16	1/2	.175	.175	1-5/16	1/16	11/16	3/8	1/4	5/64	3/32	30
CPS3-142011	1/4-20	5/8	3/16	1/2	.175	.175	1-3/8	1/16	3/4	3/8	1/4	5/64	3/32	30
CPS3-142012	1/4-20	5/8	3/16	1/2	.175	.175	1-7/16	1/16	13/16	3/8	1/4	5/64	3/32	30
CPS3-142013	1/4-20	5/8	3/16	1/2	.175	.175	1-1/2	1/16	7/8	3/8	1/4	5/64	3/32	30
CPS3-142014	1/4-20	5/8	3/16	1/2	.175	.175	1-9/16	1/16	15/16	3/8	1/4	5/64	3/32	30
CPS3-142015	1/4-20	5/8	3/16	1/2	.175	.175	1-5/8	1/16	1	3/8	1/4	5/64	3/32	30
CPS3-142016	1/4-20	5/8	3/16	1/2	.175	.175	1-11/16	1/16	1-1/16	3/8	1/4	5/64	3/32	30
CPS3-142017	1/4-20	5/8	3/16	1/2	.175	.175	1-3/4	1/16	1-1/8	3/8	1/4	5/64	3/32	30
CPS3-142018	1/4-20	3/4	1/4	1/2	.175	.175	3/4	1/8	1/8	3/8	1/4	3/32	1/8	30
CPS3-142019	1/4-20	3/4	1/4	1/2	.175	.175	13/16	1/8	3/16	3/8	1/4	3/32	1/8	30
CPS3-142020	1/4-20	3/4	1/4	1/2	.175	.175	7/8	1/8	1/4	3/8	1/4	3/32	1/8	30
CPS3-142021	1/4-20	3/4	1/4	1/2	.175	.175	15/16	1/8	5/16	3/8	1/4	3/32	1/8	30
CPS3-142022	1/4-20	3/4	1/4	1/2	.175	.175	1	1/8	3/8	3/8	1/4	3/32	1/8	30
CPS3-142023	1/4-20	3/4	1/4	1/2	.175	.175	1-1/16	1/8	7/16	3/8	1/4	3/32	1/8	30
CPS3-142024	1/4-20	3/4	1/4	1/2	.175	.175	1-1/8	1/8	1/2	3/8	1/4	3/32	1/8	30
CPS3-142025	1/4-20	3/4	1/4	1/2	.175	.175	1-3/16	1/8	9/16	3/8	1/4	3/32	1/8	30
CPS3-142026	1/4-20	3/4	1/4	1/2	.175	.175	1-1/4	1/8	5/8	3/8	1/4	3/32	1/8	30
CPS3-142027	1/4-20	3/4	1/4	1/2	.175	.175	1-5/16	1/8	11/16	3/8	1/4	3/32	1/8	30
CPS3-142028	1/4-20	3/4	1/4	1/2	.175	.175	1-3/8	1/8	3/4	3/8	1/4	3/32	1/8	30
CPS3-142029	1/4-20	3/4	1/4	1/2	.175	.175	1-7/16	1/8	13/16	3/8	1/4	3/32	1/8	30
CPS3-142030	1/4-20	3/4	1/4	1/2	.175	.175	1-1/2	1/8	7/8	3/8	1/4	3/32	1/8	30
CPS3-142031	1/4-20	3/4	1/4	1/2	.175	.175	1-9/16	1/8	15/16	3/8	1/4	3/32	1/8	30
CPS3-142032	1/4-20	3/4	1/4	1/2	.175	.175	1-5/8	1/8	1	3/8	1/4	3/32	1/8	30
CPS3-142033	1/4-20	3/4	1/4	1/2	.175	.175	1-11/16	1/8	1-1/16	3/8	1/4	3/32	1/8	30
CPS3-142034	1/4-20	3/4	1/4	1/2	.175	.175	1-3/4	1/8	1-1/8	3/8	1/4	3/32	1/8	30

Custom modified products are available.

CAPTIVE PANEL SCREW

STYLE 3 American Standard

Captive Screw	Captive Screw Retainer
Style 1	Style 2,3,4,5
Style 2	Style 1
Style 3	Style 6,7

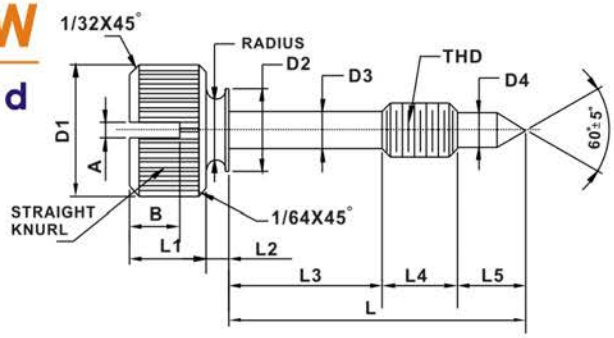

Part No.	Thread	D1	L1	D2	D3	D4	L	L2	L3	L4	L5	A	B	KNURL TPI
		+.015 -.000	+.010 -.010	+.010 -.010	+.005 -.005	+.000 -.010	+.015 -.015	+.010 -.010	+.010 -.010	+.010 -.010	+.015 -.015	+.005 -.000	+.010 -.000	
CPS3-142801	1/4-28	5/8	3/16	1/2	.175	.175	3/4	1/8	1/8	3/8	1/4	5/64	3/32	30
CPS3-142802	1/4-28	5/8	3/16	1/2	.175	.175	13/16	1/8	3/16	3/8	1/4	5/64	3/32	30
CPS3-142803	1/4-28	5/8	3/16	1/2	.175	.175	7/8	1/8	1/4	3/8	1/4	5/64	3/32	30
CPS3-142804	1/4-28	5/8	3/16	1/2	.175	.175	15/16	1/8	5/16	3/8	1/4	5/64	3/32	30
CPS3-142805	1/4-28	5/8	3/16	1/2	.175	.175	1	1/8	3/8	3/8	1/4	5/64	3/32	30
CPS3-142806	1/4-28	5/8	3/16	1/2	.175	.175	1-1/16	1/8	7/16	3/8	1/4	5/64	3/32	30
CPS3-142807	1/4-28	5/8	3/16	1/2	.175	.175	1-1/8	1/8	1/2	3/8	1/4	5/64	3/32	30
CPS3-142808	1/4-28	5/8	3/16	1/2	.175	.175	1-3/16	1/8	9/16	3/8	1/4	5/64	3/32	30
CPS3-142809	1/4-28	5/8	3/16	1/2	.175	.175	1-1/4	1/8	5/8	3/8	1/4	5/64	3/32	30
CPS3-142810	1/4-28	5/8	3/16	1/2	.175	.175	1-5/16	1/8	11/16	3/8	1/4	5/64	3/32	30
CPS3-142811	1/4-28	5/8	3/16	1/2	.175	.175	1-3/8	1/8	3/4	3/8	1/4	5/64	3/32	30
CPS3-142812	1/4-28	5/8	3/16	1/2	.175	.175	1-7/16	1/8	13/16	3/8	1/4	5/64	3/32	30
CPS3-142813	1/4-28	5/8	3/16	1/2	.175	.175	1-1/2	1/8	7/8	3/8	1/4	5/64	3/32	30
CPS3-142814	1/4-28	5/8	3/16	1/2	.175	.175	1-9/16	1/8	15/16	3/8	1/4	5/64	3/32	30
CPS3-142815	1/4-28	5/8	3/16	1/2	.175	.175	1-5/8	1/8	1	3/8	1/4	5/64	3/32	30
CPS3-142816	1/4-28	5/8	3/16	1/2	.175	.175	1-11/16	1/8	1-1/16	3/8	1/4	5/64	3/32	30
CPS3-142817	1/4-28	5/8	3/16	1/2	.175	.175	1-3/4	1/8	1-1/8	3/8	1/4	5/64	3/32	30
CPS3-142818	1/4-28	3/4	1/4	1/2	.175	.175	3/4	1/8	1/8	3/8	1/4	3/32	1/8	30
CPS3-142819	1/4-28	3/4	1/4	1/2	.175	.175	13/16	1/8	3/16	3/8	1/4	3/32	1/8	30
CPS3-142820	1/4-28	3/4	1/4	1/2	.175	.175	7/8	1/8	1/4	3/8	1/4	3/32	1/8	30
CPS3-142821	1/4-28	3/4	1/4	1/2	.175	.175	15/16	1/8	5/16	3/8	1/4	3/32	1/8	30
CPS3-142822	1/4-28	3/4	1/4	1/2	.175	.175	1	1/8	3/8	3/8	1/4	3/32	1/8	30
CPS3-142823	1/4-28	3/4	1/4	1/2	.175	.175	1-1/16	1/8	7/16	3/8	1/4	3/32	1/8	30
CPS3-142824	1/4-28	3/4	1/4	1/2	.175	.175	1-1/8	1/8	1/2	3/8	1/4	3/32	1/8	30
CPS3-142825	1/4-28	3/4	1/4	1/2	.175	.175	1-3/16	1/8	9/16	3/8	1/4	3/32	1/8	30
CPS3-142826	1/4-28	3/4	1/4	1/2	.175	.175	1-1/4	1/8	5/8	3/8	1/4	3/32	1/8	30
CPS3-142827	1/4-28	3/4	1/4	1/2	.175	.175	1-5/16	1/8	11/16	3/8	1/4	3/32	1/8	30
CPS3-142828	1/4-28	3/4	1/4	1/2	.175	.175	1-3/8	1/8	3/4	3/8	1/4	3/32	1/8	30
CPS3-142829	1/4-28	3/4	1/4	1/2	.175	.175	1-7/16	1/8	13/16	3/8	1/4	3/32	1/8	30
CPS3-142830	1/4-28	3/4	1/4	1/2	.175	.175	1-1/2	1/8	7/8	3/8	1/4	3/32	1/8	30
CPS3-142831	1/4-28	3/4	1/4	1/2	.175	.175	1-9/16	1/8	15/16	3/8	1/4	3/32	1/8	30
CPS3-142832	1/4-28	3/4	1/4	1/2	.175	.175	1-5/8	1/8	1	3/8	1/4	3/32	1/8	30
CPS3-142833	1/4-28	3/4	1/4	1/2	.175	.175	1-11/16	1/8	1-1/16	3/8	1/4	3/32	1/8	30
CPS3-142834	1/4-28	3/4	1/4	1/2	.175	.175	1-3/4	1/8	1-1/8	3/8	1/4	3/32	1/8	30

Custom modified products are available.

CAPTIVE PANEL SCREW
STYLE 4 American Standard

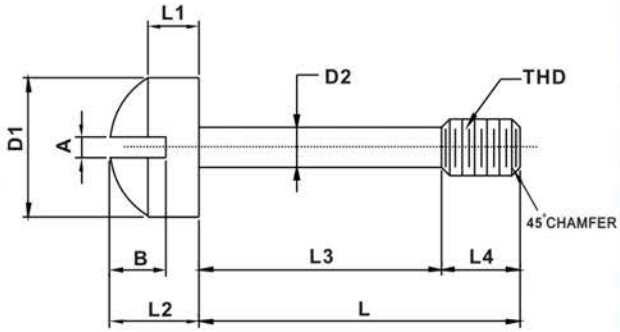

Part No.	Thread	D1	L1	D2	L	L2	L3	L4	A	B
		+.005 -.005	+.000 -.010	+.005 -.005	+.015 -.015	+.000 -.015	+.010 -.010	+.010 -.010	+.000 -.010	+.000 -.015
CPS4-25601	2-56	1/8	.062	.601	1/4	.083	3/32	5/32	.031	.037
CPS4-25602	2-56	1/8	.062	.601	5/16	.083	5/32	5/32	.031	.037
CPS4-25603	2-56	1/8	.062	.601	3/8	.083	7/32	5/32	.031	.037
CPS4-25604	2-56	1/8	.062	.601	7/16	.083	9/32	5/32	.031	.037
CPS4-25605	2-56	1/8	.062	.601	1/2	.083	11/32	5/32	.031	.037
CPS4-25606	2-56	1/8	.062	.601	9/16	.083	13/32	5/32	.031	.037
CPS4-25607	2-56	1/8	.062	.601	5/8	.083	15/32	5/32	.031	.037
CPS4-25608	2-56	1/8	.062	.601	11/16	.083	17/32	5/32	.031	.037
CPS4-25609	2-56	1/8	.062	.601	3/4	.083	19/32	5/32	.031	.037
CPS4-34801	3-48	5/32	.070	.070	1/4	.095	3/32	5/32	.035	.043
CPS4-34802	3-48	5/32	.070	.070	5/16	.095	5/32	5/32	.035	.043
CPS4-34803	3-48	5/32	.070	.070	3/8	.095	7/32	5/32	.035	.043
CPS4-34804	3-48	5/32	.070	.070	7/16	.095	9/32	5/32	.035	.043
CPS4-34805	3-48	5/32	.070	.070	1/2	.095	11/32	5/32	.035	.043
CPS4-34806	3-48	5/32	.070	.070	9/16	.095	13/32	5/32	.035	.043
CPS4-34807	3-48	5/32	.070	.070	5/8	.095	15/32	5/32	.035	.043
CPS4-34808	3-48	5/32	.070	.070	11/16	.095	17/32	5/32	.035	.043
CPS4-34809	3-48	5/32	.070	.070	3/4	.095	19/32	5/32	.035	.043
CPS4-44001	4-40	11/64	.079	.078	1/4	.107	1/16	3/16	.039	.048
CPS4-44002	4-40	11/64	.079	.078	5/16	.107	1/8	3/16	.039	.048
CPS4-44003	4-40	11/64	.079	.078	3/8	.107	3/16	3/16	.039	.048
CPS4-44004	4-40	11/64	.079	.078	7/16	.107	1/4	3/16	.039	.048
CPS4-44005	4-40	11/64	.079	.078	1/2	.107	5/16	3/16	.039	.048
CPS4-44006	4-40	11/64	.079	.078	9/16	.107	3/8	3/16	.039	.048
CPS4-44007	4-40	11/64	.079	.078	5/8	.107	7/16	3/16	.039	.048
CPS4-44008	4-40	11/64	.079	.078	11/16	.107	1/2	3/16	.039	.048
CPS4-44009	4-40	11/64	.079	.078	3/4	.107	9/16	3/16	.039	.048
CPS4-44010	4-40	11/64	.079	.078	13/16	.107	5/8	3/16	.039	.048
CPS4-44011	4-40	11/64	.079	.078	7/8	.107	11/16	3/16	.039	.048
CPS4-44012	4-40	11/64	.079	.078	15/16	.107	3/4	3/16	.039	.048
CPS4-44013	4-40	11/64	.079	.078	1	.107	13/16	3/16	.039	.048
CPS4-63201	6-32	7/32	.096	.095	5/16	.132	3/32	7/32	.048	.060
CPS4-63202	6-32	7/32	.096	.095	3/8	.132	5/32	7/32	.048	.060
CPS4-63203	6-32	7/32	.096	.095	7/16	.132	7/32	7/32	.048	.060
CPS4-63204	6-32	7/32	.096	.095	1/2	.132	9/32	7/32	.048	.060
CPS4-63205	6-32	7/32	.096	.095	9/16	.132	11/32	7/32	.048	.060
CPS4-63206	6-32	7/32	.096	.095	5/8	.132	13/32	7/32	.048	.060
CPS4-63207	6-32	7/32	.096	.095	11/16	.132	15/32	7/32	.048	.060
CPS4-63208	6-32	7/32	.096	.095	3/4	.132	17/32	7/32	.048	.060
CPS4-63209	6-32	7/32	.096	.095	13/16	.132	19/32	7/32	.048	.060
CPS4-63210	6-32	7/32	.096	.095	7/8	.132	21/32	7/32	.048	.060
CPS4-63211	6-32	7/32	.096	.095	15/16	.132	23/32	7/32	.048	.060
CPS4-63212	6-32	7/32	.096	.095	1	.132	25/32	7/32	.048	.060

Custom modified products are available.

CAPTIVE PANEL SCREW
STYLE 4 American Standard

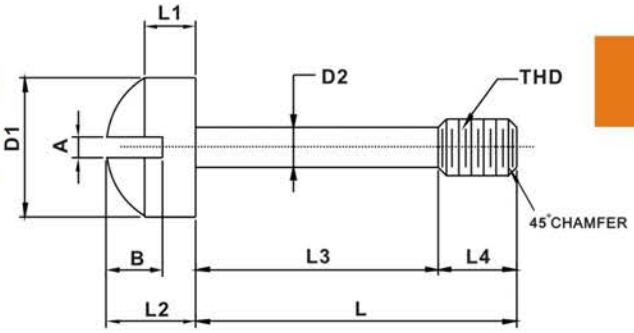

Part No.	Thread	D1	L1	D2	L	L2	L3	L4	A	B
		+.005 -.005	+.000 -.010	+.005 -.005	+.015 -.015	+.000 -.015	+.010 -.010	+.010 -.010	+.000 -.010	+.000 -.015
CPS4-83201	8-32	1/4	.113	.120	5/16	.156	3/32	7/32	.054	.071
CPS4-83202	8-32	1/4	.113	.120	3/8	.156	5/32	7/32	.054	.071
CPS4-83203	8-32	1/4	.113	.120	7/16	.156	7/32	7/32	.054	.071
CPS4-83204	8-32	1/4	.113	.120	1/2	.156	9/32	7/32	.054	.071
CPS4-83205	8-32	1/4	.113	.120	9/16	.156	11/32	7/32	.054	.071
CPS4-83206	8-32	1/4	.113	.120	5/8	.156	13/32	7/32	.054	.071
CPS4-83207	8-32	1/4	.113	.120	11/16	.156	15/32	7/32	.054	.071
CPS4-83208	8-32	1/4	.113	.120	3/4	.156	17/32	7/32	.054	.071
CPS4-83209	8-32	1/4	.113	.120	13/16	.156	19/32	7/32	.054	.071
CPS4-83210	8-32	1/4	.113	.120	7/8	.156	21/32	7/32	.054	.071
CPS4-83211	8-32	1/4	.113	.120	15/16	.156	23/32	7/32	.054	.071
CPS4-83212	8-32	1/4	.113	.120	1	.156	25/32	7/32	.054	.071
CPS4-83213	8-32	1/4	.113	.120	1-1/16	.156	27/32	7/32	.054	.071
CPS4-83214	8-32	1/4	.113	.120	1-1/8	.156	29/32	7/32	.054	.071
CPS4-83215	8-32	1/4	.113	.120	1-3/16	.156	31/32	7/32	.054	.071
CPS4-83216	8-32	1/4	.113	.120	1-1/4	.156	1-1/32	7/32	.054	.071
CPS4-102401	10-24	5/16	.130	.130	3/8	.180	3/32	9/32	.060	.083
CPS4-102402	10-24	5/16	.130	.130	7/16	.180	5/32	9/32	.060	.083
CPS4-102403	10-24	5/16	.130	.130	1/2	.180	7/32	9/32	.060	.083
CPS4-102404	10-24	5/16	.130	.130	9/16	.180	9/32	9/32	.060	.083
CPS4-102405	10-24	5/16	.130	.130	5/8	.180	11/32	9/32	.060	.083
CPS4-102406	10-24	5/16	.130	.130	11/16	.180	13/32	9/32	.060	.083
CPS4-102407	10-24	5/16	.130	.130	3/4	.180	15/32	9/32	.060	.083
CPS4-102408	10-24	5/16	.130	.130	13/16	.180	17/32	9/32	.060	.083
CPS4-102409	10-24	5/16	.130	.130	7/8	.180	19/32	9/32	.060	.083
CPS4-102410	10-24	5/16	.130	.130	15/16	.180	21/32	9/32	.060	.083
CPS4-102411	10-24	5/16	.130	.130	1	.180	23/32	9/32	.060	.083
CPS4-102412	10-24	5/16	.130	.130	1-1/16	.180	25/32	9/32	.060	.083
CPS4-102413	10-24	5/16	.130	.130	1-1/8	.180	27/32	9/32	.060	.083
CPS4-102414	10-24	5/16	.130	.130	1-3/16	.180	29/32	9/32	.060	.083
CPS4-102415	10-24	5/16	.130	.130	1-1/4	.180	31/32	9/32	.060	.083
CPS4-102416	10-24	5/16	.130	.130	1-5/16	.180	1-1/32	9/32	.060	.083
CPS4-102417	10-24	5/16	.130	.130	1-3/8	.180	1-3/32	9/32	.060	.083
CPS4-102418	10-24	5/16	.130	.130	1-7/16	.180	1-5/32	9/32	.060	.083
CPS4-102419	10-24	5/16	.130	.130	1-1/2	.180	1-7/32	9/32	.060	.083
CPS4-103201	10-32	5/16	.130	.130	3/8	.180	3/32	9/32	.060	.083
CPS4-103202	10-32	5/16	.130	.130	7/16	.180	5/32	9/32	.060	.083
CPS4-103203	10-32	5/16	.130	.130	1/2	.180	7/32	9/32	.060	.083
CPS4-103204	10-32	5/16	.130	.130	9/16	.180	9/32	9/32	.060	.083
CPS4-103205	10-32	5/16	.130	.130	5/8	.180	11/32	9/32	.060	.083
CPS4-103206	10-32	5/16	.130	.130	11/16	.180	13/32	9/32	.060	.083
CPS4-103207	10-32	5/16	.130	.130	3/4	.180	15/32	9/32	.060	.083
CPS4-103208	10-32	5/16	.130	.130	13/16	.180	17/32	9/32	.060	.083
CPS4-103209	10-32	5/16	.130	.130	7/8	.180	19/32	9/32	.060	.083
CPS4-103210	10-32	5/16	.130	.130	15/16	.180	21/32	9/32	.060	.083
CPS4-103211	10-32	5/16	.130	.130	1	.180	23/32	9/32	.060	.083
CPS4-103212	10-32	5/16	.130	.130	1-1/16	.180	25/32	9/32	.060	.083
CPS4-103213	10-32	5/16	.130	.130	1-1/8	.180	27/32	9/32	.060	.083
CPS4-103214	10-32	5/16	.130	.130	1-3/16	.180	29/32	9/32	.060	.083
CPS4-103215	10-32	5/16	.130	.130	1-1/4	.180	31/32	9/32	.060	.083
CPS4-103216	10-32	5/16	.130	.130	1-5/16	.180	1-1/32	9/32	.060	.083
CPS4-103217	10-32	5/16	.130	.130	1-3/8	.180	1-3/32	9/32	.060	.083
CPS4-103218	10-32	5/16	.130	.130	1-7/16	.180	1-5/32	9/32	.060	.083
CPS4-103219	10-32	5/16	.130	.130	1-1/2	.180	1-7/32	9/32	.060	.083

Custom modified products are available.

CAPTIVE PANEL SCREW
STYLE 5 American Standard

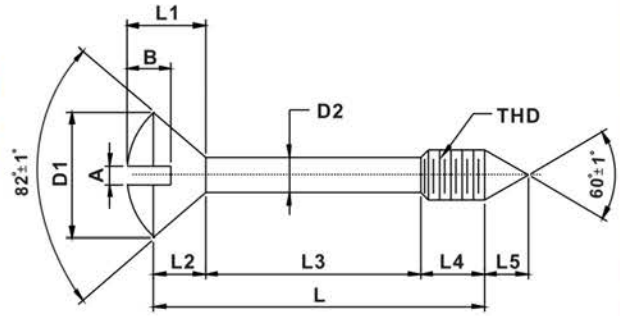

Part No.	Thread	D1	L1	D2	L	L2	L3	L4	L5	A	B
		+.015 -.015	+.010 -.010	+.005 -.005	+.015 -.015	+.020 -.000	+.010 -.010	+.015 -.015	+.015 -.015	+.005 -.000	+.000 -.010
CPS5-44001	4-40	.210	.093	.078	5/16	.067	1/16	3/16	.096	1/32	1/16
CPS5-44002	4-40	.210	.093	.078	3/8	.067	1/8	3/16	.096	1/32	1/16
CPS5-44003	4-40	.210	.093	.078	7/16	.067	3/16	3/16	.096	1/32	1/16
CPS5-44004	4-40	.210	.093	.078	1/2	.067	1/4	3/16	.096	1/32	1/16
CPS5-44005	4-40	.210	.093	.078	9/16	.067	5/16	3/16	.096	1/32	1/16
CPS5-44006	4-40	.210	.093	.078	5/8	.067	3/8	3/16	.096	1/32	1/16
CPS5-44007	4-40	.210	.093	.078	11/16	.067	7/16	3/16	.096	1/32	1/16
CPS5-44008	4-40	.210	.093	.078	3/4	.067	1/2	3/16	.096	1/32	1/16
CPS5-44009	4-40	.210	.093	.078	13/16	.067	9/16	3/16	.096	1/32	1/16
CPS5-44010	4-40	.210	.093	.078	7/8	.067	5/8	3/16	.096	1/32	1/16
CPS5-44011	4-40	.210	.093	.078	15/16	.067	11/16	3/16	.096	1/32	1/16
CPS5-44012	4-40	.210	.093	.078	1	.067	3/4	3/16	.096	1/32	1/16
CPS5-63201	6-32	.261	.117	.095	7/16	.083	3/32	1/4	.121	3/64	5/64
CPS5-63202	6-32	.261	.117	.095	1/2	.083	5/32	1/4	.121	3/64	5/64
CPS5-63203	6-32	.261	.117	.095	9/16	.083	7/32	1/4	.121	3/64	5/64
CPS5-63204	6-32	.261	.117	.095	5/8	.083	9/32	1/4	.121	3/64	5/64
CPS5-63205	6-32	.261	.117	.095	11/16	.083	11/32	1/4	.121	3/64	5/64
CPS5-63206	6-32	.261	.117	.095	3/4	.083	13/32	1/4	.121	3/64	5/64
CPS5-63207	6-32	.261	.117	.095	13/16	.083	15/32	1/4	.121	3/64	5/64
CPS5-63208	6-32	.261	.117	.095	7/8	.083	17/32	1/4	.121	3/64	5/64
CPS5-63209	6-32	.261	.117	.095	15/16	.083	19/32	1/4	.121	3/64	5/64
CPS5-63210	6-32	.261	.117	.095	1	.083	21/32	1/4	.121	3/64	5/64
CPS5-63211	6-32	.261	.117	.095	1-1/16	.083	23/32	1/4	.121	3/64	5/64
CPS5-63212	6-32	.261	.117	.095	1-1/8	.083	25/32	1/4	.121	3/64	5/64
CPS5-63213	6-32	.261	.117	.095	1-3/16	.083	27/32	1/4	.121	3/64	5/64
CPS5-63214	6-32	.261	.117	.095	1-1/4	.083	29/32	1/4	.121	3/64	5/64
CPS5-63215	6-32	.261	.117	.095	1-5/16	.083	31/32	1/4	.121	3/64	5/64
CPS5-63216	6-32	.261	.117	.095	1-3/8	.083	1-1/32	1/4	.121	3/64	5/64
CPS5-63217	6-32	.261	.117	.095	1-7/16	.083	1-3/32	1/4	.121	3/64	5/64
CPS5-63218	6-32	.261	.117	.095	1-1/2	.083	1-5/32	1/4	.121	3/64	5/64
CPS5-83201	8-32	.312	.139	.120	1/2	.100	9/64	1/4	.142	3/64	5/64
CPS5-83202	8-32	.312	.139	.120	9/16	.100	13/64	1/4	.142	3/64	5/64
CPS5-83203	8-32	.312	.139	.120	5/8	.100	17/64	1/4	.142	3/64	5/64
CPS5-83204	8-32	.312	.139	.120	11/16	.100	21/64	1/4	.142	3/64	5/64
CPS5-83205	8-32	.312	.139	.120	3/4	.100	25/64	1/4	.142	3/64	5/64
CPS5-83206	8-32	.312	.139	.120	13/16	.100	29/64	1/4	.142	3/64	5/64
CPS5-83207	8-32	.312	.139	.120	7/8	.100	33/64	1/4	.142	3/64	5/64
CPS5-83208	8-32	.312	.139	.120	15/16	.100	37/64	1/4	.142	3/64	5/64
CPS5-83209	8-32	.312	.139	.120	1	.100	41/64	1/4	.142	3/64	5/64
CPS5-83210	8-32	.312	.139	.120	1-1/16	.100	45/64	1/4	.142	3/64	5/64
CPS5-83211	8-32	.312	.139	.120	1-1/8	.100	49/64	1/4	.142	3/64	5/64
CPS5-83212	8-32	.312	.139	.120	1-3/16	.100	53/64	1/4	.142	3/64	5/64
CPS5-83213	8-32	.312	.139	.120	1-1/4	.100	57/64	1/4	.142	3/64	5/64
CPS5-83214	8-32	.312	.139	.120	1-5/16	.100	61/64	1/4	.142	3/64	5/64
CPS5-83215	8-32	.312	.139	.120	1-3/8	.100	1-1/64	1/4	.142	3/64	5/64
CPS5-83216	8-32	.312	.139	.120	1-7/16	.100	1-5/64	1/4	.142	3/64	5/64
CPS5-83217	8-32	.312	.139	.120	1-1/2	.100	1-9/64	1/4	.142	3/64	5/64

Custom modified products are available.

CAPTIVE PANEL SCREW
STYLE 5 American Standard

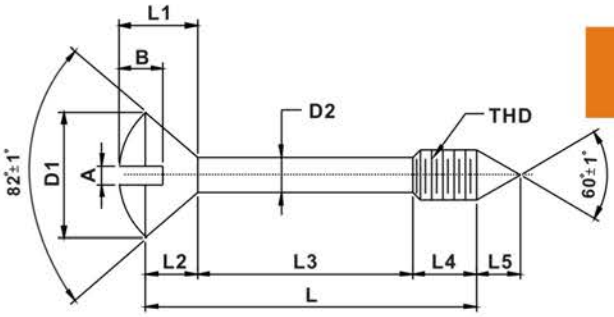

Part No.	Thread	D1	L1	D2	L	L2	L3	L4	L5	A	B
		+.015 -.015	+.010 -.010	+.005 -.005	+.015 -.015	+.020 -.000	+.010 -.010	+.015 -.015	+.015 -.015	+.005 -.000	+.000 -.010
CPS5-102401	10-24	.363	.162	.130	1/2	.116	1/8	1/4	.164	1/16	3/32
CPS5-102402	10-24	.363	.162	.130	9/16	.116	3/16	1/4	.164	1/16	3/32
CPS5-102403	10-24	.363	.162	.130	5/8	.116	1/4	1/4	.164	1/16	3/32
CPS5-102404	10-24	.363	.162	.130	11/16	.116	5/16	1/4	.164	1/16	3/32
CPS5-102405	10-24	.363	.162	.130	3/4	.116	3/8	1/4	.164	1/16	3/32
CPS5-102406	10-24	.363	.162	.130	13/16	.116	7/16	1/4	.164	1/16	3/32
CPS5-102407	10-24	.363	.162	.130	7/8	.116	1/2	1/4	.164	1/16	3/32
CPS5-102408	10-24	.363	.162	.130	15/16	.116	9/16	1/4	.164	1/16	3/32
CPS5-102409	10-24	.363	.162	.130	1	.116	5/8	1/4	.164	1/16	3/32
CPS5-102410	10-24	.363	.162	.130	1-1/16	.116	11/16	1/4	.164	1/16	3/32
CPS5-102411	10-24	.363	.162	.130	1-1/8	.116	3/4	1/4	.164	1/16	3/32
CPS5-102412	10-24	.363	.162	.130	1-3/16	.116	13/16	1/4	.164	1/16	3/32
CPS5-102413	10-24	.363	.162	.130	1-1/4	.116	7/8	1/4	.164	1/16	3/32
CPS5-102414	10-24	.363	.162	.130	1-5/16	.116	15/16	1/4	.164	1/16	3/32
CPS5-102415	10-24	.363	.162	.130	1-3/8	.116	1	1/4	.164	1/16	3/32
CPS5-102416	10-24	.363	.162	.130	1-7/16	.116	1-1/16	1/4	.164	1/16	3/32
CPS5-102417	10-24	.363	.162	.130	1-1/2	.116	1-1/8	1/4	.164	1/16	3/32
CPS5-102418	10-24	.363	.162	.130	1-9/16	.116	1-3/16	1/4	.164	1/16	3/32
CPS5-102419	10-24	.363	.162	.130	1-5/8	.116	1-1/4	1/4	.164	1/16	3/32
CPS5-102420	10-24	.363	.162	.130	1-11/16	.116	1-5/16	1/4	.164	1/16	3/32
CPS5-102421	10-24	.363	.162	.130	1-3/4	.116	1-3/8	1/4	.164	1/16	3/32
CPS5-102422	10-24	.363	.162	.130	1-13/16	.116	1-7/16	1/4	.164	1/16	3/32
CPS5-102423	10-24	.363	.162	.130	1-7/8	.116	1-1/2	1/4	.164	1/16	3/32
CPS5-102424	10-24	.363	.162	.130	1-15/16	.116	1-9/16	1/4	.164	1/16	3/32
CPS5-102425	10-24	.363	.162	.130	2	.116	1-5/8	1/4	.164	1/16	3/32
CPS5-103201	10-32	.363	.162	.130	1/2	.116	1/8	1/4	.164	1/16	3/32
CPS5-103202	10-32	.363	.162	.130	9/16	.116	3/16	1/4	.164	1/16	3/32
CPS5-103203	10-32	.363	.162	.130	5/8	.116	1/4	1/4	.164	1/16	3/32
CPS5-103204	10-32	.363	.162	.130	11/16	.116	5/16	1/4	.164	1/16	3/32
CPS5-103205	10-32	.363	.162	.130	3/4	.116	3/8	1/4	.164	1/16	3/32
CPS5-103206	10-32	.363	.162	.130	13/16	.116	7/16	1/4	.164	1/16	3/32
CPS5-103207	10-32	.363	.162	.130	7/8	.116	1/2	1/4	.164	1/16	3/32
CPS5-103208	10-32	.363	.162	.130	15/16	.116	9/16	1/4	.164	1/16	3/32
CPS5-103209	10-32	.363	.162	.130	1	.116	5/8	1/4	.164	1/16	3/32
CPS5-103210	10-32	.363	.162	.130	1-1/16	.116	11/16	1/4	.164	1/16	3/32
CPS5-103211	10-32	.363	.162	.130	1-1/8	.116	3/4	1/4	.164	1/16	3/32
CPS5-103212	10-32	.363	.162	.130	1-3/16	.116	13/16	1/4	.164	1/16	3/32
CPS5-103213	10-32	.363	.162	.130	1-1/4	.116	7/8	1/4	.164	1/16	3/32
CPS5-103214	10-32	.363	.162	.130	1-5/16	.116	15/16	1/4	.164	1/16	3/32
CPS5-103215	10-32	.363	.162	.130	1-3/8	.116	1	1/4	.164	1/16	3/32
CPS5-103216	10-32	.363	.162	.130	1-7/16	.116	1-1/16	1/4	.164	1/16	3/32
CPS5-103217	10-32	.363	.162	.130	1-1/2	.116	1-1/8	1/4	.164	1/16	3/32
CPS5-103218	10-32	.363	.162	.130	1-9/16	.116	1-3/16	1/4	.164	1/16	3/32
CPS5-103219	10-32	.363	.162	.130	1-5/8	.116	1-1/4	1/4	.164	1/16	3/32
CPS5-103220	10-32	.363	.162	.130	1-11/16	.116	1-5/16	1/4	.164	1/16	3/32
CPS5-103221	10-32	.363	.162	.130	1-3/4	.116	1-3/8	1/4	.164	1/16	3/32
CPS5-103222	10-32	.363	.162	.130	1-13/16	.116	1-7/16	1/4	.164	1/16	3/32
CPS5-103223	10-32	.363	.162	.130	1-7/8	.116	1-1/2	1/4	.164	1/16	3/32
CPS5-103224	10-32	.363	.162	.130	1-15/16	.116	1-9/16	1/4	.164	1/16	3/32
CPS5-103225	10-32	.363	.162	.130	2	.116	1-5/8	1/4	.164	1/16	3/32

Custom modified products are available.

CAPTIVE PANEL SCREW
STYLE 6 American Standard

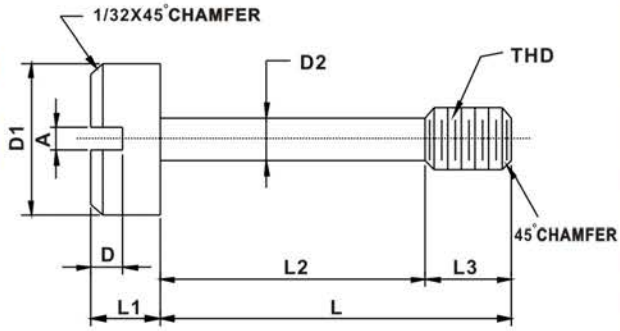

Part No.	Thread	D1	L1	D2	L	L2	L3	A	B
		+.005 -.005	+.010 -.010	+.000 -.005	+.010 -.005	+.005 -.000	+.005 -.005	+.005 -.000	+.010 -.000
CPS6-44001	4-40	1/4	1/8	.078	15/32	9/32	3/16	3/64	3/64
CPS6-44002	4-40	1/4	1/8	.078	17/32	11/32	3/16	3/64	3/64
CPS6-63201	6-32	9/32	1/8	.095	17/32	5/16	7/32	3/64	5/64
CPS6-63202	6-32	9/32	1/8	.095	19/32	3/8	7/32	3/64	5/64
CPS6-63203	6-32	9/32	1/8	.095	21/32	7/16	7/32	3/64	5/64
CPS6-83201	8-32	5/16	5/32	.120	21/32	13/32	1/4	1/16	1/16
CPS6-83202	8-32	5/16	5/32	.120	23/32	15/32	1/4	1/16	1/16
CPS6-83203	8-32	5/16	5/32	.120	25/32	17/32	1/4	1/16	1/16
CPS6-103201	10-32	3/8	3/16	.130	27/32	17/32	5/16	1/16	1/16
CPS6-103202	10-32	3/8	3/16	.130	29/32	19/32	5/16	1/16	1/16

Custom modified products are available.

Foreword

(PANEL SCREW RETAINER)

PANEL SCREW RETAINER-STYLE 1

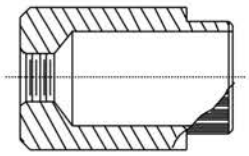

PANEL SCREW RETAINER-STYLE 2

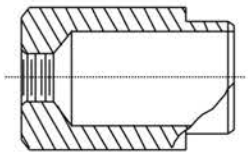

PANEL SCREW RETAINER-STYLE 3

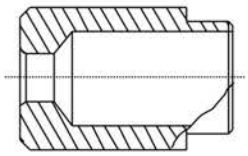

PANEL SCREW RETAINER-STYLE 4

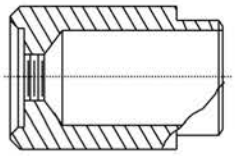

PANEL SCREW RETAINER-STYLE 5

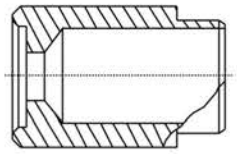

PANEL SCREW RETAINER-STYLE 6

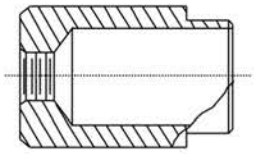

PANEL SCREW RETAINER-STYLE7

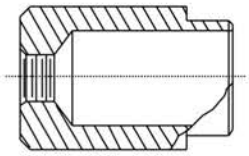

PSR1- 440050-SS- SB5

Select Panel Screw Retainer Style

Select Part No.

Select Material

Select Finish

Material Description	Code
Brass	B
Carbon Steel	S
300 Series Stainless Steel	SS

How to order Panel Screw Petainer

Panel Screw Petainer	Code
Style 1	PSR1
Style 2	PSR2
Style 3	PSR3
Style 4	PSR4
Style 5	PSR5
Style 6	PSR6
Style 7	PSR7

Finish Description	Code
Nickel Plated	S1
Chrome Plated	S2
Satin Chrome	S6
Zinc Plated	S10
Zinc Yellow Chromate	S11
Black Oxide	S22
Black Zinc	S23
Tin Plated	S24
No Finish	S14
Passivate	SB5

Custom modified products are available.

PANEL SCREW RETAINER
STYLE 1 American Standard

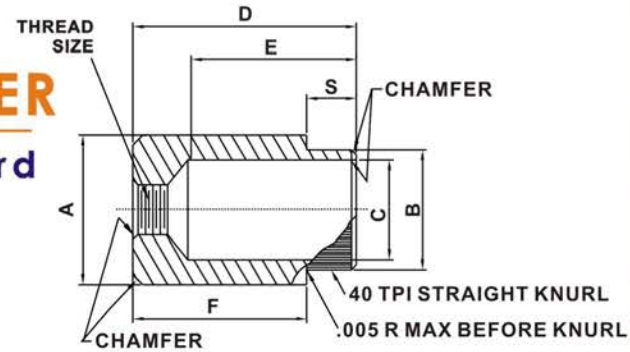

Part No.	Thread	Panel	A	B	C	D	E	F	S
			+.004 -.004	+.002 -.002	+.004 -.001	+.010 -.010	+.005 -.005	+.005 -.005	+.005 -.005
PSR1-440050	4-40	.048-.072	1/4	.198	.150	1/4	.164	.200	.050
PSR1-440080	4-40	.074-.109	1/4	.198	.150	1/4	.164	.170	.080
PSR1-440125	4-40	.119-.156	1/4	.198	.150	1/4	.164	.125	.125
PSR1-632050	6-32	.048-.072	1/4	.198	.150	5/16	.210	.262	.050
PSR1-632080	6-32	.074-.109	1/4	.198	.150	5/16	.210	.232	.080
PSR1-632125	6-32	.119-.156	1/4	.198	.150	5/16	.210	.187	.125
PSR1-632188	6-32	.188-	1/4	.198	.150	5/16	.210	.124	.188
PSR1-832050	8-32	.048-.072	5/16	.288	.188	5/16	.208	.262	.050
PSR1-832080	8-32	.074-.109	5/16	.288	.188	5/16	.208	.232	.080
PSR1-832125	8-32	.119-.156	5/16	.288	.188	5/16	.208	.187	.125
PSR1-832188	8-32	.188-	5/16	.288	.188	5/16	.208	.124	.188
PSR1-1024050	10-24	.048-.072	3/8	.280	.228	3/8	.236	.325	.050
PSR1-1024080	10-24	.074-.109	3/8	.280	.228	3/8	.236	.295	.080
PSR1-1024125	10-24	.119-.156	3/8	.280	.228	3/8	.236	.250	.125
PSR1-1024188	10-24	.188-	3/8	.280	.228	3/8	.236	.187	.188
PSR1-1024250	10-24	.250-	3/8	.280	.228	3/8	.236	.125	.250
PSR1-1032050	10-32	.048-.072	3/8	.280	.228	3/8	.236	.325	.050
PSR1-1032080	10-32	.074-.109	3/8	.280	.228	3/8	.236	.295	.080
PSR1-1032125	10-32	.119-.156	3/8	.280	.228	3/8	.236	.250	.125
PSR1-1032188	10-32	.188-	3/8	.280	.228	3/8	.236	.187	.188
PSR1-1032250	10-32	.250-	3/8	.280	.228	3/8	.236	.125	.250
PSR1-1420050	1/4-20	.048-.072	1/2	.366	.295	7/16	.292	.387	.050
PSR1-1420080	1/4-20	.074-.109	1/2	.366	.295	7/16	.292	.357	.080
PSR1-1420125	1/4-20	.119-.156	1/2	.366	.295	7/16	.292	.312	.125
PSR1-1420188	1/4-20	.188-	1/2	.366	.295	7/16	.292	.249	.188
PSR1-1420250	1/4-20	.250-	1/2	.366	.295	7/16	.292	.187	.250
PSR1-1428050	1/4-28	.048-.072	1/2	.366	.295	7/16	.292	.387	.050
PSR1-1428080	1/4-28	.074-.109	1/2	.366	.295	7/16	.292	.357	.080
PSR1-1428125	1/4-28	.119-.156	1/2	.366	.295	7/16	.292	.312	.125
PSR1-1428188	1/4-28	.188-	1/2	.366	.295	7/16	.292	.249	.188
PSR1-1428250	1/4-28	.250-	1/2	.366	.295	7/16	.292	.187	.250
PSR1-51618050	5/16-18	.048-.072	5/8	.414	.347	1/2	.358	.450	.050
PSR1-51618080	5/16-18	.074-.109	5/8	.414	.347	1/2	.358	.420	.080
PSR1-51618125	5/16-18	.119-.156	5/8	.414	.347	1/2	.358	.375	.125
PSR1-51618188	5/16-18	.188-	5/8	.414	.347	1/2	.358	.312	.188
PSR1-51618250	5/16-18	.250-	5/8	.414	.347	1/2	.358	.250	.250
PSR1-3816080	3/8-16	.074-.109	3/4	.479	.406	9/16	.418	.482	.080
PSR1-3816125	3/8-16	.119-.156	3/4	.479	.406	9/16	.418	.437	.125
PSR1-3816188	3/8-16	.188-	3/4	.479	.406	9/16	.418	.374	.188
PSR1-3816250	3/8-16	.250-	3/4	.479	.406	9/16	.418	.312	.250

Custom modified products are available.

PANEL SCREW RETAINER
STYLE 2 American Standard

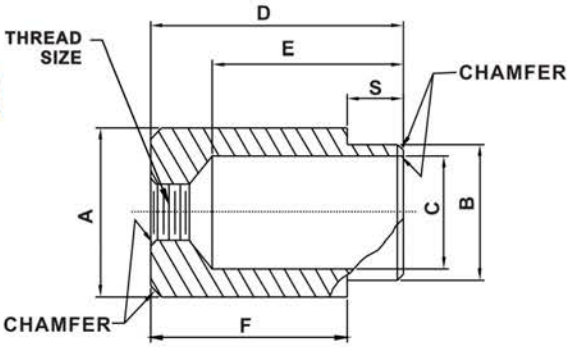

Part No.	Thread	Panel	A	B	C	D	E	F	S
			+.004 -.004	+.000 -.003	+.004 -.001	+.010 -.010	+.005 -.005	+.005 -.005	+.005 -.005
PSR2-440062	4-40	.052-.067	9/32	.250	.210	3/8	.263	.312	.062
PSR2-440093	4-40	.084-.099	9/32	.250	.210	3/8	.263	.281	.093
PSR2-440125	4-40	.109-.140	9/32	.250	.210	3/8	.263	.250	.125
PSR2-440187	4-40	.171-.203	9/32	.250	.210	3/8	.263	.187	.187
PSR2-632062	6-32	.052-.067	9/32	.250	.210	3/8	.265	.312	.062
PSR2-632093	6-32	.084-.099	9/32	.250	.210	3/8	.265	.281	.093
PSR2-632125	6-32	.109-.140	9/32	.250	.210	3/8	.265	.250	.125
PSR2-632187	6-32	.171-.203	9/32	.250	.210	3/8	.265	.187	.187
PSR2-632250	6-32	.234-.265	9/32	.250	.210	3/8	.265	.125	.250
PSR2-832062	8-32	.052-.067	17/32	.433	.386	9/16	.388	.500	.062
PSR2-832093	8-32	.084-.099	17/32	.433	.386	9/16	.388	.468	.093
PSR2-832125	8-32	.109-.140	17/32	.433	.386	9/16	.388	.437	.125
PSR2-832187	8-32	.171-.203	17/32	.433	.386	9/16	.388	.375	.187
PSR2-832250	8-32	.234-.265	17/32	.433	.386	9/16	.388	.312	.250
PSR2-1024062	10-24	.052-.067	17/32	.433	.386	9/16	.395	.500	.062
PSR2-1024093	10-24	.084-.099	17/32	.433	.386	9/16	.395	.468	.093
PSR2-1024125	10-24	.109-.140	17/32	.433	.386	9/16	.395	.437	.125
PSR2-1024187	10-24	.171-.203	17/32	.433	.386	9/16	.395	.375	.187
PSR2-1024250	10-24	.234-.265	17/32	.433	.386	9/16	.395	.312	.250
PSR2-1032062	10-32	.052-.067	17/32	.433	.386	9/16	.395	.500	.062
PSR2-1032093	10-32	.084-.099	17/32	.433	.386	9/16	.395	.468	.093
PSR2-1032125	10-32	.109-.140	17/32	.433	.386	9/16	.395	.437	.125
PSR2-1032187	10-32	.171-.203	17/32	.433	.386	9/16	.395	.375	.187
PSR2-1032250	10-32	.234-.265	17/32	.433	.386	9/16	.395	.312	.250
PSR2-1224062	12-24	.052-.067	17/32	.433	.386	9/16	.396	.500	.062
PSR2-1224093	12-24	.084-.099	17/32	.433	.386	9/16	.396	.468	.093
PSR2-1224125	12-24	.109-.140	17/32	.433	.386	9/16	.396	.437	.125
PSR2-1224187	12-24	.171-.203	17/32	.433	.386	9/16	.396	.375	.187
PSR2-1224250	12-24	.234-.265	17/32	.433	.386	9/16	.396	.312	.250
PSR2-1420062	1/4-20	.052-.067	17/32	.433	.386	9/16	.403	.500	.062
PSR2-1420093	1/4-20	.084-.099	17/32	.433	.386	9/16	.403	.468	.093
PSR2-1420125	1/4-20	.109-.140	17/32	.433	.386	9/16	.403	.437	.125
PSR2-1420187	1/4-20	.171-.203	17/32	.433	.386	9/16	.403	.375	.187
PSR2-1420250	1/4-20	.234-.265	17/32	.433	.386	9/16	.403	.312	.250
PSR2-1428062	1/4-28	.052-.067	17/32	.433	.386	9/16	.403	.500	.062
PSR2-1428093	1/4-28	.084-.099	17/32	.433	.386	9/16	.403	.468	.093
PSR2-1428125	1/4-28	.109-.140	17/32	.433	.386	9/16	.403	.437	.125
PSR2-1428187	1/4-28	.171-.203	17/32	.433	.386	9/16	.403	.375	.187
PSR2-1428250	1/4-28	.234-.265	17/32	.433	.386	9/16	.403	.312	.250

Custom modified products are available.

PANEL SCREW RETAINER
STYLE 3 American Standard

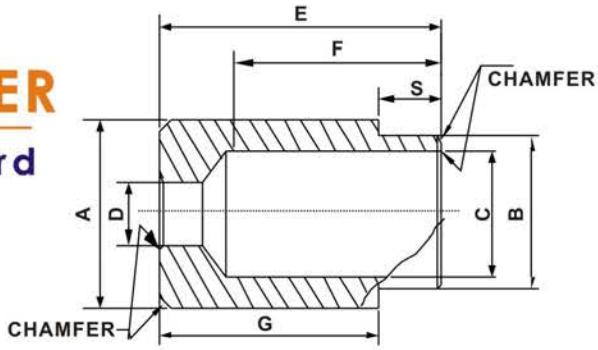

Part No.	Thread	Panel	A	B	C	D	E	F	G	S
			+.004 -.004	+.000 -.003	+.004 -.001	+.004 -.001	+.010 -.010	+.005 -.005	+.005 -.005	+.005 -.005
PSR3-440062	4-40	.052-.067	9/32	.250	.210	.125	3/8	.299	.312	.062
PSR3-440093	4-40	.084-.099	9/32	.250	.210	.125	3/8	.299	.281	.093
PSR3-440125	4-40	.109-.140	9/32	.250	.210	.125	3/8	.299	.250	.125
PSR3-440187	4-40	.171-.203	9/32	.250	.210	.125	3/8	.299	.187	.187
PSR3-632062	6-32	.052-.067	9/32	.250	.210	.152	3/8	.304	.312	.062
PSR3-632093	6-32	.084-.099	9/32	.250	.210	.152	3/8	.304	.281	.093
PSR3-632125	6-32	.109-.140	9/32	.250	.210	.152	3/8	.304	.250	.125
PSR3-632187	6-32	.171-.203	9/32	.250	.210	.152	3/8	.304	.187	.187
PSR3-832062	8-32	.052-.067	17/32	.433	.386	.177	9/16	.447	.500	.062
PSR3-832093	8-32	.084-.099	17/32	.433	.386	.177	9/16	.447	.468	.093
PSR3-832125	8-32	.109-.140	17/32	.433	.386	.177	9/16	.447	.437	.125
PSR3-832187	8-32	.171-.203	17/32	.433	.386	.177	9/16	.447	.375	.187
PSR3-832250	8-32	.234-.265	17/32	.433	.386	.177	9/16	.447	.312	.250
PSR3-1024062	10-24	.052-.067	17/32	.433	.386	.203	9/16	.464	.500	.062
PSR3-1024093	10-24	.084-.099	17/32	.433	.386	.203	9/16	.464	.468	.093
PSR3-1024125	10-24	.109-.140	17/32	.433	.386	.203	9/16	.464	.437	.125
PSR3-1024187	10-24	.171-.203	17/32	.433	.386	.203	9/16	.464	.375	.187
PSR3-1024250	10-24	.234-.265	17/32	.433	.386	.203	9/16	.464	.312	.250
PSR3-1032062	10-32	.052-.067	17/32	.433	.386	.203	9/16	.464	.500	.062
PSR3-1032093	10-32	.084-.099	17/32	.433	.386	.203	9/16	.464	.468	.093
PSR3-1032125	10-32	.109-.140	17/32	.433	.386	.203	9/16	.464	.437	.125
PSR3-1032187	10-32	.171-.203	17/32	.433	.386	.203	9/16	.464	.375	.187
PSR3-1032250	10-32	.234-.265	17/32	.433	.386	.203	9/16	.464	.312	.250
PSR3-1224062	12-24	.052-.067	17/32	.433	.386	.228	9/16	.459	.500	.062
PSR3-1224093	12-24	.084-.099	17/32	.433	.386	.228	9/16	.459	.468	.093
PSR3-1224125	12-24	.109-.140	17/32	.433	.386	.228	9/16	.459	.437	.125
PSR3-1224187	12-24	.171-.203	17/32	.433	.386	.228	9/16	.459	.375	.187
PSR3-1224250	12-24	.234-.265	17/32	.433	.386	.228	9/16	.459	.312	.250
PSR3-1420062	1/4-20	.052-.067	17/32	.433	.386	.257	9/16	.475	.500	.062
PSR3-1420093	1/4-20	.084-.099	17/32	.433	.386	.257	9/16	.475	.468	.093
PSR3-1420125	1/4-20	.109-.140	17/32	.433	.386	.257	9/16	.475	.437	.125
PSR3-1420187	1/4-20	.171-.203	17/32	.433	.386	.257	9/16	.475	.375	.187
PSR3-1420250	1/4-20	.234-.265	17/32	.433	.386	.257	9/16	.475	.312	.250
PSR3-1428062	1/4-28	.052-.067	17/32	.433	.386	.257	9/16	.475	.500	.062
PSR3-1428093	1/4-28	.084-.099	17/32	.433	.386	.257	9/16	.475	.468	.093
PSR3-1428125	1/4-28	.109-.140	17/32	.433	.386	.257	9/16	.475	.437	.125
PSR3-1428187	1/4-28	.171-.203	17/32	.433	.386	.257	9/16	.475	.375	.187
PSR3-1428250	1/4-28	.234-.265	17/32	.433	.386	.257	9/16	.475	.312	.250

Custom modified products are available.

PANEL SCREW RETAINER
STYLE 4 American Standard

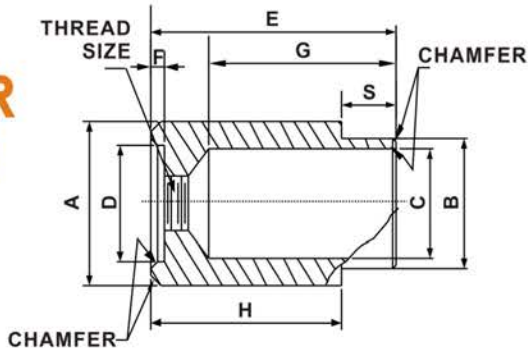

Part No.	Thread	Panel	A	B	C	D	E	F	G	H	S
			+.004 -.004	+.000 -.003	+.004 -.001	+.005 -.000	+.010 -.010	+.010 -.000	+.005 -.005	+.005 -.005	+.005 -.005
PSR4-440062	4-40	.052-.067	9/32	.250	.210	.192	7/16	.078	.263	.375	.062
PSR4-440093	4-40	.084-.099	9/32	.250	.210	.192	7/16	.078	.263	.344	.093
PSR4-440125	4-40	.109-.140	9/32	.250	.210	.192	7/16	.078	.263	.312	.125
PSR4-440187	4-40	.171-.203	9/32	.250	.210	.192	7/16	.078	.263	.250	.187
PSR4-440250	4-40	.234-.265	9/32	.250	.210	.192	7/16	.078	.263	.187	.250
PSR4-632062	6-32	.052-.067	9/32	.250	.210	.192	7/16	.078	.266	.375	.062
PSR4-632093	6-32	.084-.099	9/32	.250	.210	.192	7/16	.078	.266	.344	.093
PSR4-632125	6-32	.109-.140	9/32	.250	.210	.192	7/16	.078	.266	.312	.125
PSR4-632187	6-32	.171-.203	9/32	.250	.210	.192	7/16	.078	.266	.250	.187
PSR4-632250	6-32	.234-.265	9/32	.250	.210	.192	7/16	.078	.266	.187	.250
PSR4-832062	8-32	.052-.067	17/32	.433	.386	.312	5/8	.093	.388	.562	.062
PSR4-832093	8-32	.084-.099	17/32	.433	.386	.312	5/8	.093	.388	.532	.093
PSR4-832125	8-32	.109-.140	17/32	.433	.386	.312	5/8	.093	.388	.500	.125
PSR4-832187	8-32	.171-.203	17/32	.433	.386	.312	5/8	.093	.388	.437	.187
PSR4-832250	8-32	.234-.265	17/32	.433	.386	.312	5/8	.093	.388	.375	.250
PSR4-1024062	10-24	.052-.067	17/32	.433	.386	.312	5/8	.093	.393	.562	.062
PSR4-1024093	10-24	.084-.099	17/32	.433	.386	.312	5/8	.093	.393	.532	.093
PSR4-1024125	10-24	.109-.140	17/32	.433	.386	.312	5/8	.093	.393	.500	.125
PSR4-1024187	10-24	.171-.203	17/32	.433	.386	.312	5/8	.093	.393	.437	.187
PSR4-1024250	10-24	.234-.265	17/32	.433	.386	.312	5/8	.093	.393	.375	.250
PSR4-1032062	10-32	.052-.067	17/32	.433	.386	.312	5/8	.093	.393	.562	.062
PSR4-1032093	10-32	.084-.099	17/32	.433	.386	.312	5/8	.093	.393	.532	.093
PSR4-1032125	10-32	.109-.140	17/32	.433	.386	.312	5/8	.093	.393	.500	.125
PSR4-1032187	10-32	.171-.203	17/32	.433	.386	.312	5/8	.093	.393	.437	.187
PSR4-1032250	10-32	.234-.265	17/32	.433	.386	.312	5/8	.093	.393	.375	.250
PSR4-1224062	12-24	.052-.067	17/32	.433	.386	.312	5/8	.093	.397	.562	.062
PSR4-1224093	12-24	.084-.099	17/32	.433	.386	.312	5/8	.093	.397	.532	.093
PSR4-1224125	12-24	.109-.140	17/32	.433	.386	.312	5/8	.093	.397	.500	.125
PSR4-1224187	12-24	.171-.203	17/32	.433	.386	.312	5/8	.093	.397	.437	.187
PSR4-1224250	12-24	.234-.265	17/32	.433	.386	.312	5/8	.093	.397	.375	.250
PSR4-1420062	1/4-20	.052-.067	17/32	.433	.386	.312	5/8	.093	.405	.562	.062
PSR4-1420093	1/4-20	.084-.099	17/32	.433	.386	.312	5/8	.093	.405	.532	.093
PSR4-1420125	1/4-20	.109-.140	17/32	.433	.386	.312	5/8	.093	.405	.500	.125
PSR4-1420187	1/4-20	.171-.203	17/32	.433	.386	.312	5/8	.093	.405	.437	.187
PSR4-1420250	1/4-20	.234-.265	17/32	.433	.386	.312	5/8	.093	.405	.375	.250
PSR4-1428062	1/4-28	.052-.067	17/32	.433	.386	.312	5/8	.093	.405	.562	.062
PSR4-1428093	1/4-28	.084-.099	17/32	.433	.386	.312	5/8	.093	.405	.532	.093
PSR4-1428125	1/4-28	.109-.140	17/32	.433	.386	.312	5/8	.093	.405	.500	.125
PSR4-1428187	1/4-28	.171-.203	17/32	.433	.386	.312	5/8	.093	.405	.437	.187
PSR4-1428250	1/4-28	.234-.265	17/32	.433	.386	.312	5/8	.093	.405	.375	.250

Custom modified products are available.

PANEL SCREW RETAINER
STYLE 5 American Standard

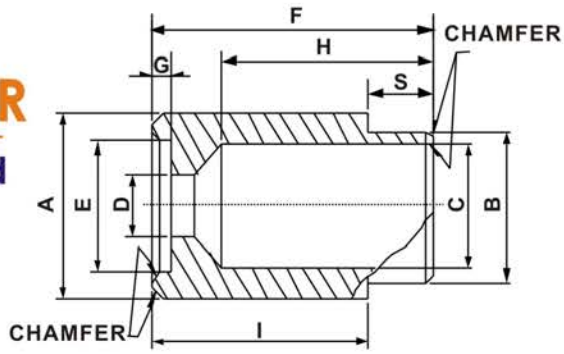

Part No.	Thread	Panel	A	B	C	D	E	F	G	H	I	S
			+.004 -.004	+.000 -.003	+.004 -.001	+.004 -.001	+.005 -.000	+.010 -.010	+.010 -.000	+.005 -.005	+.005 -.005	+.005 -.005
PSR5-440062	4-40	.052-.067	9/32	.250	.210	.125	.192	7/16	.078	.299	.375	.062
PSR5-440093	4-40	.084-.099	9/32	.250	.210	.125	.192	7/16	.078	.299	.344	.093
PSR5-440125	4-40	.109-.140	9/32	.250	.210	.125	.192	7/16	.078	.299	.312	.125
PSR5-440187	4-40	.171-.203	9/32	.250	.210	.125	.192	7/16	.078	.299	.250	.187
PSR5-440250	4-40	.234-.265	9/32	.250	.210	.125	.192	7/16	.078	.299	.187	.250
PSR5-632062	6-32	.052-.067	9/32	.250	.210	.150	.192	7/16	.078	.305	.375	.062
PSR5-632093	6-32	.084-.099	9/32	.250	.210	.150	.192	7/16	.078	.305	.344	.093
PSR5-632125	6-32	.109-.140	9/32	.250	.210	.150	.192	7/16	.078	.305	.312	.125
PSR5-632187	6-32	.171-.203	9/32	.250	.210	.150	.192	7/16	.078	.305	.250	.187
PSR5-632250	6-32	.234-.265	9/32	.250	.210	.150	.192	7/16	.078	.305	.187	.250
PSR5-832062	8-32	.052-.067	17/32	.433	.386	.175	.312	5/8	.093	.427	.562	.062
PSR5-832093	8-32	.084-.099	17/32	.433	.386	.175	.312	5/8	.093	.427	.532	.093
PSR5-832125	8-32	.109-.140	17/32	.433	.386	.175	.312	5/8	.093	.427	.500	.125
PSR5-832187	8-32	.171-.203	17/32	.433	.386	.175	.312	5/8	.093	.427	.437	.187
PSR5-832250	8-32	.234-.265	17/32	.433	.386	.175	.312	5/8	.093	.427	.375	.250
PSR5-1024062	10-24	.052-.067	17/32	.433	.386	.203	.312	5/8	.093	.432	.562	.062
PSR5-1024093	10-24	.084-.099	17/32	.433	.386	.203	.312	5/8	.093	.432	.532	.093
PSR5-1024125	10-24	.109-.140	17/32	.433	.386	.203	.312	5/8	.093	.432	.500	.125
PSR5-1024187	10-24	.171-.203	17/32	.433	.386	.203	.312	5/8	.093	.432	.437	.187
PSR5-1024250	10-24	.234-.265	17/32	.433	.386	.203	.312	5/8	.093	.432	.375	.250
PSR5-1032062	10-32	.052-.067	17/32	.433	.386	.203	.312	5/8	.093	.432	.562	.062
PSR5-1032093	10-32	.084-.099	17/32	.433	.386	.203	.312	5/8	.093	.432	.532	.093
PSR5-1032125	10-32	.109-.140	17/32	.433	.386	.203	.312	5/8	.093	.432	.500	.125
PSR5-1032187	10-32	.171-.203	17/32	.433	.386	.203	.312	5/8	.093	.432	.437	.187
PSR5-1032250	10-32	.234-.265	17/32	.433	.386	.203	.312	5/8	.093	.432	.375	.250
PSR5-1224062	12-24	.052-.067	17/32	.433	.386	.228	.312	5/8	.093	.438	.562	.062
PSR5-1224093	12-24	.084-.099	17/32	.433	.386	.228	.312	5/8	.093	.438	.532	.093
PSR5-1224125	12-24	.109-.140	17/32	.433	.386	.228	.312	5/8	.093	.438	.500	.125
PSR5-1224187	12-24	.171-.203	17/32	.433	.386	.228	.312	5/8	.093	.438	.437	.187
PSR5-1224250	12-24	.234-.265	17/32	.433	.386	.228	.312	5/8	.093	.438	.375	.250
PSR5-1420062	1/4-20	.052-.067	17/32	.433	.386	.257	.312	5/8	.093	.445	.562	.062
PSR5-1420093	1/4-20	.084-.099	17/32	.433	.386	.257	.312	5/8	.093	.445	.532	.093
PSR5-1420125	1/4-20	.109-.140	17/32	.433	.386	.257	.312	5/8	.093	.445	.500	.125
PSR5-1420187	1/4-20	.171-.203	17/32	.433	.386	.257	.312	5/8	.093	.445	.437	.187
PSR5-1420250	1/4-20	.234-.265	17/32	.433	.386	.257	.312	5/8	.093	.445	.375	.250
PSR5-1428062	1/4-28	.052-.067	17/32	.433	.386	.257	.312	5/8	.093	.445	.562	.062
PSR5-1428093	1/4-28	.084-.099	17/32	.433	.386	.257	.312	5/8	.093	.445	.532	.093
PSR5-1428125	1/4-28	.109-.140	17/32	.433	.386	.257	.312	5/8	.093	.445	.500	.125
PSR5-1428187	1/4-28	.171-.203	17/32	.433	.386	.257	.312	5/8	.093	.445	.437	.187
PSR5-1428250	1/4-28	.234-.265	17/32	.433	.386	.257	.312	5/8	.093	.445	.375	.250

Custom modified products are available.

PANEL SCREW RETAINER
STYLE 6 American Standard

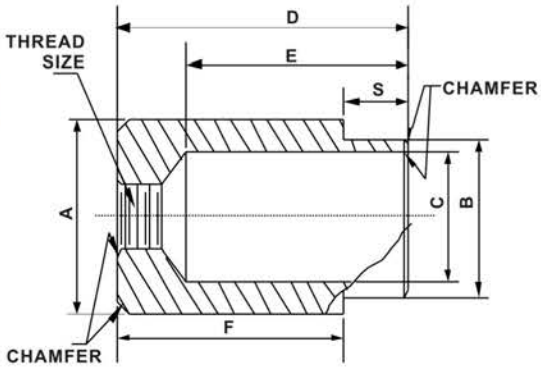

Part No.	Thread	Panel	A	B	C	D	E	F	S
			+.004 -.004	+.000 -.003	+.004 -.001	+.010 -.010	+.005 -.005	+.005 -.005	+.005 -.005
PSR6-440062	4-40	.052-.067	1/4	.188	.150	1/4	.161	.188	.062
PSR6-440093	4-40	.084-.099	1/4	.188	.150	1/4	.161	.156	.093
PSR6-440125	4-40	.109-.140	1/4	.188	.150	1/4	.161	.125	.125
PSR6-632062	6-32	.052-.067	1/4	.188	.150	5/16	.210	.250	.062
PSR6-632093	6-32	.084-.099	1/4	.188	.150	5/16	.210	.218	.093
PSR6-632125	6-32	.109-.140	1/4	.188	.150	5/16	.210	.187	.125
PSR6-632187	6-32	.171-.203	1/4	.188	.150	5/16	.210	.125	.187
PSR6-832062	8-32	.052-.067	3/8	.218	.188	5/16	.210	.250	.062
PSR6-832093	8-32	.084-.099	3/8	.218	.188	5/16	.210	.218	.093
PSR6-832125	8-32	.109-.140	3/8	.218	.188	5/16	.210	.187	.125
PSR6-832187	8-32	.171-.203	3/8	.218	.188	5/16	.210	.125	.187
PSR6-1024062	10-24	.052-.067	3/8	.270	.228	3/8	.236	.312	.062
PSR6-1024093	10-24	.084-.099	3/8	.270	.228	3/8	.236	.281	.093
PSR6-1024125	10-24	.109-.140	3/8	.270	.228	3/8	.236	.250	.125
PSR6-1024187	10-24	.171-.203	3/8	.270	.228	3/8	.236	.188	.187
PSR6-1024250	10-24	.234-.265	3/8	.270	.228	3/8	.236	.125	.250
PSR6-1032062	10-32	.052-.067	3/8	.270	.228	3/8	.236	.312	.062
PSR6-1032093	10-32	.084-.099	3/8	.270	.228	3/8	.236	.281	.093
PSR6-1032125	10-32	.109-.140	3/8	.270	.228	3/8	.236	.250	.125
PSR6-1032187	10-32	.171-.203	3/8	.270	.228	3/8	.236	.188	.187
PSR6-1032250	10-32	.234-.265	3/8	.270	.228	3/8	.236	.125	.250
PSR6-1224062	12-24	.052-.067	3/8	.270	.228	3/8	.239	.312	.062
PSR6-1224093	12-24	.084-.099	3/8	.270	.228	3/8	.239	.281	.093
PSR6-1224125	12-24	.109-.140	3/8	.270	.228	3/8	.239	.250	.125
PSR6-1224187	12-24	.171-.203	3/8	.270	.228	3/8	.239	.188	.187
PSR6-1224250	12-24	.234-.265	3/8	.270	.228	3/8	.239	.125	.250
PSR6-1420062	1/4-20	.052-.067	1/2	.356	.295	7/16	.295	.375	.062
PSR6-1420093	1/4-20	.084-.099	1/2	.356	.295	7/16	.295	.343	.093
PSR6-1420125	1/4-20	.109-.140	1/2	.356	.295	7/16	.295	.312	.125
PSR6-1420187	1/4-20	.171-.203	1/2	.356	.295	7/16	.295	.250	.187
PSR6-1420250	1/4-20	.234-.265	1/2	.356	.295	7/16	.295	.187	.250
PSR6-1428062	1/4-28	.052-.067	1/2	.356	.295	7/16	.295	.375	.062
PSR6-1428093	1/4-28	.084-.099	1/2	.356	.295	7/16	.295	.343	.093
PSR6-1428125	1/4-28	.109-.140	1/2	.356	.295	7/16	.295	.312	.125
PSR6-1428187	1/4-28	.171-.203	1/2	.356	.295	7/16	.295	.250	.187
PSR6-1428250	1/4-28	.234-.265	1/2	.356	.295	7/16	.295	.187	.250
PSR6-51624062	5/16-24	.052-.067	1/2	.404	.343	7/16	.297	.375	.062
PSR6-51624093	5/16-24	.084-.099	1/2	.404	.343	7/16	.297	.343	.093
PSR6-51624125	5/16-24	.109-.140	1/2	.404	.343	7/16	.297	.312	.125
PSR6-51624187	5/16-24	.171-.203	1/2	.404	.343	7/16	.297	.250	.187
PSR6-51624250	5/16-24	.234-.265	1/2	.404	.343	7/16	.297	.187	.250

Custom modified products are available.

PANEL SCREW RETAINER
STYLE 7 American Standard

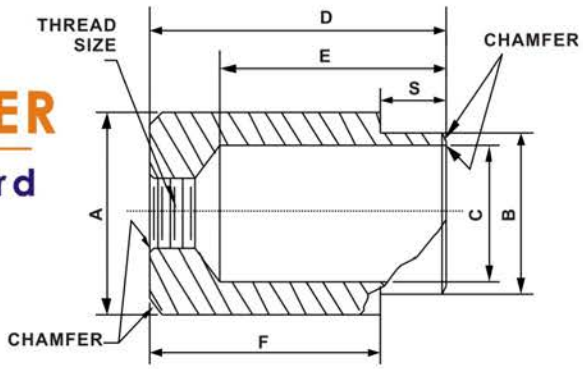

Part No.	Thread	Panel	A	B	C	D	E	F	S
			+.004 -.004	+.000 -.003	+.004 -.001	+.010 -.010	+.005 -.005	+.005 -.005	+.005 -.005
PSR7-632165	6-32	.109-.140	9/16	.406	.343	.477	.242	.312	.165
PSR7-632230	6-32	.171-.203	9/16	.406	.343	.542	.307	.312	.230
PSR7-632290	6-32	.234-.265	9/16	.406	.343	.602	.367	.312	.290
PSR7-832165	8-32	.109-.140	9/16	.406	.343	.477	.248	.312	.165
PSR7-832230	8-32	.171-.203	9/16	.406	.343	.542	.315	.312	.230
PSR7-832290	8-32	.234-.265	9/16	.406	.343	.602	.373	.312	.290
PSR7-1032165	10-32	.109-.140	9/16	.406	.343	.477	.252	.312	.165
PSR7-1032230	10-32	.171-.203	9/16	.406	.343	.542	.318	.312	.230
PSR7-1032290	10-32	.234-.265	9/16	.406	.343	.602	.378	.312	.290
PSR7-1224165	12-24	.109-.140	9/16	.406	.343	.477	.256	.312	.165
PSR7-1224230	12-24	.171-.203	9/16	.406	.343	.542	.321	.312	.230
PSR7-1224290	12-24	.234-.265	9/16	.406	.343	.602	.321	.312	.290
PSR7-1420165	1/4-20	.109-.140	9/16	.406	.343	.477	.261	.312	.165
PSR7-1420230	1/4-20	.171-.203	9/16	.406	.343	.542	.326	.312	.230
PSR7-1420290	1/4-20	.234-.265	9/16	.406	.343	.602	.386	.312	.290

Custom modified products are available.

PANEL SCREW RETAINER SPRINGS & WASHERS

American Standard

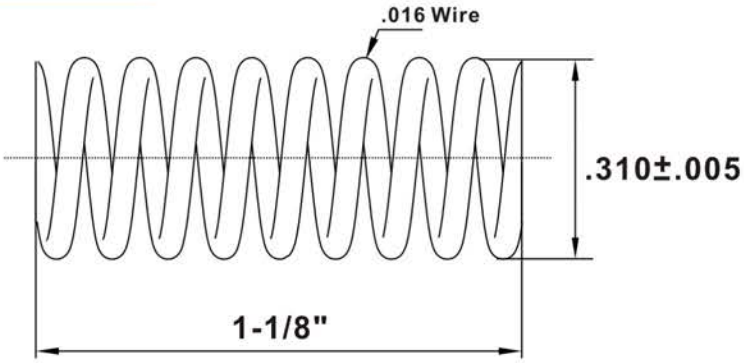

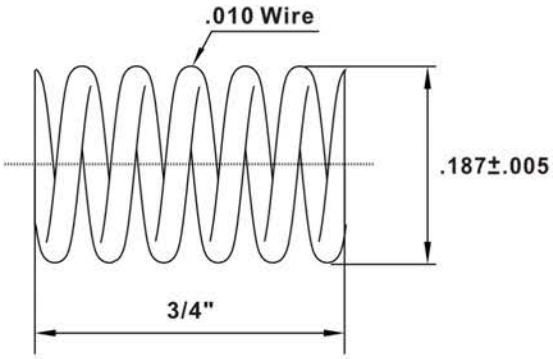

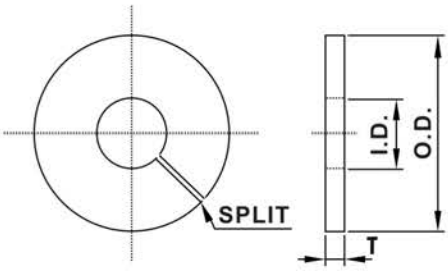

Springs

Part No.	Material	Thread Size	O.D.	Length
SPRING-ACP1	Satinless Steel 300Series	4-40~6#32	.187	3/4
SPRING-ACP2	Satinless Steel 300Series	All other threads	.310	1-1/8

Washers

Part No.	Material	Thread Size	O.D.	I.D.	L
			+.003 -.003	+.003 -.003	+.003 -.003
WASHER-ACP1	Satinless Steel 300Series	4-40	.171	.093	.010
WASHER-ACP2	Satinless Steel 300Series	6-32	.171	.112	.010
WASHER-ACP3	Satinless Steel 300Series	8-32	.312	.146	.012
WASHER-ACP4	Satinless Steel 300Series	10-24	.312	.166	.012
WASHER-ACP5	Satinless Steel 300Series	10-32	.312	.166	.012
WASHER-ACP6	Satinless Steel 300Series	12-24	.312	.190	.012
WASHER-ACP7	Satinless Steel 300Series	1/4-20	.312	.204	.012
WASHER-ACP8	Satinless Steel 300Series	1/4-28	.312	.204	.012

Custom modified products are available.

CAPTIVE PANEL SCREW
STYLE 1 Metric Standard

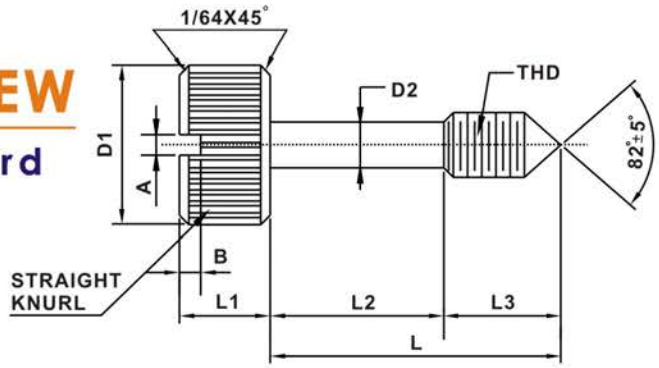

Part No.	Thread	D1	L1	D2	L	L2	L3	A	B
		+0.40 -0.40	+0.40 -0.40	+0.20 -0.20	+0.40 -0.40	+0.30 -0.30	+0.40 -0.40	+0.20 -0.40	+.030 -.000
CPS1-M301	M3x0.5	8	5	2	16.5	9.5	7	1	1.5
CPS1-M302	M3x0.5	8	5	2	18	11	7	1	1.5
CPS1-M303	M3x0.5	8	5	2	20	13	7	1	1.5
CPS1-M304	M3x0.5	8	5	2	21.5	14.5	7	1	1.5
CPS1-M305	M3x0.5	8	5	2	23	16	7	1	1.5
CPS1-M3.501	M3.5x0.6	8	5	2.5	16.5	9.5	7	1.2	1.5
CPS1-M3.502	M3.5x0.6	8	5	2.5	18	11	7	1.2	1.5
CPS1-M3.503	M3.5x0.6	8	5	2.5	20	13	7	1.2	1.5
CPS1-M3.504	M3.5x0.6	8	5	2.5	21.5	14.5	7	1.2	1.5
CPS1-M3.505	M3.5x0.6	8	5	2.5	23	16	7	1.2	1.5
CPS1-M3.506	M3.5x0.6	9.5	5	2.5	16.5	9.5	7	1.2	1.5
CPS1-M3.507	M3.5x0.6	9.5	5	2.5	18	11	7	1.2	1.5
CPS1-M3.508	M3.5x0.6	9.5	5	2.5	20	13	7	1.2	1.5
CPS1-M3.509	M3.5x0.6	9.5	5	2.5	21.5	14.5	7	1.2	1.5
CPS1-M3.510	M3.5x0.6	9.5	5	2.5	23	16	7	1.2	1.5
CPS1-M401	M4x0.7	11	6.5	3	16	6.5	9.5	1.5	1.5
CPS1-M402	M4x0.7	11	6.5	3	17.5	8	9.5	1.5	1.5
CPS1-M403	M4x0.7	11	6.5	3	19	9.5	9.5	1.5	1.5
CPS1-M404	M4x0.7	11	6.5	3	20.5	11	9.5	1.5	1.5
CPS1-M405	M4x0.7	11	6.5	3	22	12.5	9.5	1.5	1.5
CPS1-M406	M4x0.7	11	6.5	3	24	14.5	9.5	1.5	1.5
CPS1-M407	M4x0.7	11	6.5	3	25.5	16	9.5	1.5	1.5
CPS1-M408	M4x0.7	11	6.5	3	27	17.5	9.5	1.5	1.5
CPS1-M409	M4x0.7	11	6.5	3	28.5	19	9.5	1.5	1.5
CPS1-M410	M4x0.7	11	6.5	3	30.5	21	9.5	1.5	1.5
CPS1-M411	M4x0.7	11	6.5	3	32	22.5	9.5	1.5	1.5

Custom modified products are available.

CAPTIVE PANEL SCREW
STYLE 1 Metric Standard

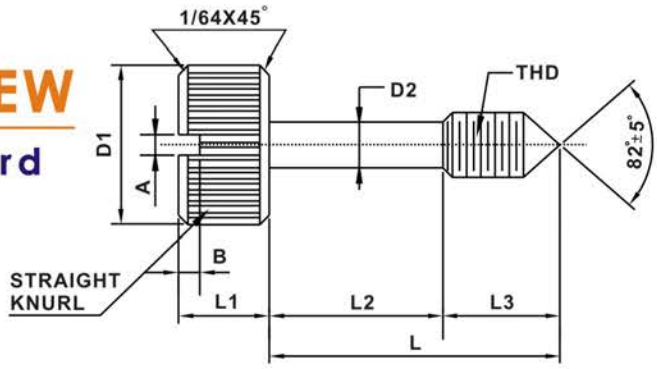

Part No.	Thread	D1	L1	D2	L	L2	L3	A	B
		+0.40 -0.40	+0.40 -0.40	+0.20 -0.20	+0.40 -0.40	+0.30 -0.30	+0.40 -0.40	+0.20 -0.40	+.030 -.000
CPS1-M501	M5x0.8	11	6.5	3.5	16	6.5	9.5	1.5	1.5
CPS1-M502	M5x0.8	11	6.5	3.5	17.5	8	9.5	1.5	1.5
CPS1-M503	M5x0.8	11	6.5	3.5	19	9.5	9.5	1.5	1.5
CPS1-M504	M5x0.8	11	6.5	3.5	20.5	11	9.5	1.5	1.5
CPS1-M505	M5x0.8	11	6.5	3.5	22	12.5	9.5	1.5	1.5
CPS1-M506	M5x0.8	11	6.5	3.5	24	14.5	9.5	1.5	1.5
CPS1-M507	M5x0.8	11	6.5	3.5	25.5	16	9.5	1.5	1.5
CPS1-M508	M5x0.8	11	6.5	3.5	27	17.5	9.5	1.5	1.5
CPS1-M509	M5x0.8	11	6.5	3.5	28.5	19	9.5	1.5	1.5
CPS1-M510	M5x0.8	11	6.5	3.5	30.5	21	9.5	1.5	1.5
CPS1-M511	M5x0.8	11	6.5	3.5	32	22.5	9.5	1.5	1.5
CPS1-M512	M5x0.8	11	6.5	3.5	33.5	24	9.5	1.5	1.5
CPS1-M513	M5x0.8	11	6.5	3.5	35	25.5	9.5	1.5	1.5
CPS1-M514	M5x0.8	11	6.5	3.5	36.5	27	9.5	1.5	1.5
CPS1-M515	M5x0.8	11	6.5	3.5	38	28.5	9.5	1.5	1.5
CPS1-M601	M6x1.0	14.5	6.5	4.5	16	6.5	9.5	1.5	2.5
CPS1-M602	M6x1.0	14.5	6.5	4.5	17.5	8	9.5	1.5	2.5
CPS1-M603	M6x1.0	14.5	6.5	4.5	19	9.5	9.5	1.5	2.5
CPS1-M604	M6x1.0	14.5	6.5	4.5	20.5	11	9.5	1.5	2.5
CPS1-M605	M6x1.0	14.5	6.5	4.5	22	12.5	9.5	1.5	2.5
CPS1-M606	M6x1.0	14.5	6.5	4.5	24	14.5	9.5	1.5	2.5
CPS1-M607	M6x1.0	14.5	6.5	4.5	25.5	16	9.5	1.5	2.5
CPS1-M608	M6x1.0	14.5	6.5	4.5	27	17.5	9.5	1.5	2.5
CPS1-M609	M6x1.0	14.5	6.5	4.5	28.5	19	9.5	1.5	2.5
CPS1-M610	M6x1.0	14.5	6.5	4.5	30.5	21	9.5	1.5	2.5
CPS1-M611	M6x1.0	14.5	6.5	4.5	32	22.5	9.5	1.5	2.5
CPS1-M612	M6x1.0	14.5	6.5	4.5	33.5	24	9.5	1.5	2.5
CPS1-M613	M6x1.0	14.5	6.5	4.5	35	25.5	9.5	1.5	2.5
CPS1-M614	M6x1.0	14.5	6.5	4.5	36.5	27	9.5	1.5	2.5
CPS1-M615	M6x1.0	14.5	6.5	4.5	38	28.5	9.5	1.5	2.5
CPS1-M616	M6x1.0	14.5	6.5	4.5	39.5	30	9.5	1.5	2.5
CPS1-M617	M6x1.0	14.5	6.5	4.5	41.5	32	9.5	1.5	2.5
CPS1-M618	M6x1.0	14.5	6.5	4.5	43	33.5	9.5	1.5	2.5
CPS1-M619	M6x1.0	14.5	6.5	4.5	44.5	35	9.5	1.5	2.5
CPS1-M620	M6x1.0	14.5	6.5	4.5	46	36	9.5	1.5	2.5
CPS1-M621	M6x1.0	14.5	6.5	4.5	47.5	38	9.5	1.5	2.5
CPS1-M622	M6x1.0	14.5	6.5	4.5	49	39.5	9.5	1.5	2.5
CPS1-M623	M6x1.0	14.5	6.5	4.5	51	41.5	9.5	1.5	2.5

Custom modified products are available.

CAPTIVE PANEL SCREW
STYLE 2 Metric Standard

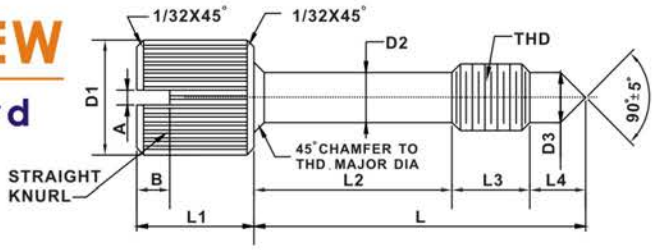

Part No.	Thread	D1	L1	D2	D3	L	L2	L3	L4	A	B
		+0.50 -0.20	+0.30 -0.30	+0.15 -0.15	+0.00 -0.30	+0.50 -0.50	+0.30 -0.30	+0.00 -0.40	+0.40 -0.40	+0.20 -0.00	+.030 -.000
CPS2-M301	M3x0.5	6.5	6.5	2	2	9.5	4.3	3.2	2	1.2	2
CPS2-M302	M3x0.5	6.5	6.5	2	2	11	5.8	3.2	2	1.2	2
CPS2-M303	M3x0.5	6.5	6.5	2	2	13	7.8	3.2	2	1.2	2
CPS2-M304	M3x0.5	6.5	6.5	2	2	14.5	9.3	3.2	2	1.2	2
CPS2-M305	M3x0.5	6.5	6.5	2	2	16	10.8	3.2	2	1.2	2
CPS2-M306	M3x0.5	6.5	6.5	2	2	17.5	12.3	3.2	2	1.2	2
CPS2-M307	M3x0.5	6.5	6.5	2	2	19	13.8	3.2	2	1.2	2
CPS2-M308	M3x0.5	6.5	6.5	2	2	20.5	15.3	3.2	2	1.2	2
CPS2-M309	M3x0.5	6.5	6.5	2	2	22	16.8	3.2	2	1.2	2
CPS2-M310	M3x0.5	6.5	6.5	2	2	24	18.8	3.2	2	1.2	2
CPS2-M311	M3x0.5	6.5	6.5	2	2	25.5	20.3	3.2	2	1.2	2
CPS2-M312	M3x0.5	8	8	2	2	9.5	4.3	3.2	2	1.2	2
CPS2-M313	M3x0.5	8	8	2	2	11	5.8	3.2	2	1.2	2
CPS2-M314	M3x0.5	8	8	2	2	13	7.8	3.2	2	1.2	2
CPS2-M315	M3x0.5	8	8	2	2	14.5	9.3	3.2	2	1.2	2
CPS2-M316	M3x0.5	8	8	2	2	16	10.8	3.2	2	1.2	2
CPS2-M317	M3x0.5	8	8	2	2	17.5	12.3	3.2	2	1.2	2
CPS2-M318	M3x0.5	8	8	2	2	19	13.8	3.2	2	1.2	2
CPS2-M319	M3x0.5	8	8	2	2	20.5	15.3	3.2	2	1.2	2
CPS2-M320	M3x0.5	8	8	2	2	22	16.8	3.2	2	1.2	2
CPS2-M321	M3x0.5	8	8	2	2	24	18.8	3.2	2	1.2	2
CPS2-M322	M3x0.5	8	8	2	2	25.5	20.3	3.2	2	1.2	2
CPS2-M3.501	M3.5x0.6	8	8	2.5	2.5	11	3	5.5	2.5	1.2	2
CPS2-M3.502	M3.5x0.6	8	8	2.5	2.5	13	5	5.5	2.5	1.2	2
CPS2-M3.503	M3.5x0.6	8	8	2.5	2.5	14.5	6.5	5.5	2.5	1.2	2
CPS2-M3.504	M3.5x0.6	8	8	2.5	2.5	16	8	5.5	2.5	1.2	2
CPS2-M3.505	M3.5x0.6	8	8	2.5	2.5	17.5	9.5	5.5	2.5	1.2	2
CPS2-M3.506	M3.5x0.6	8	8	2.5	2.5	19	11	5.5	2.5	1.2	2
CPS2-M3.507	M3.5x0.6	8	8	2.5	2.5	20.5	12.5	5.5	2.5	1.2	2
CPS2-M3.508	M3.5x0.6	8	8	2.5	2.5	22	14	5.5	2.5	1.2	2
CPS2-M3.509	M3.5x0.6	8	8	2.5	2.5	24	16	5.5	2.5	1.2	2
CPS2-M3.510	M3.5x0.6	8	8	2.5	2.5	25.5	17.5	5.5	2.5	1.2	2
CPS2-M3.511	M3.5x0.6	8	8	2.5	2.5	27	19	5.5	2.5	1.2	2
CPS2-M3.512	M3.5x0.6	8	8	2.5	2.5	28.5	20.5	5.5	2.5	1.2	2
CPS2-M3.513	M3.5x0.6	8	8	2.5	2.5	30.5	22.5	5.5	2.5	1.2	2
CPS2-M3.514	M3.5x0.6	8	8	2.5	2.5	32	24	5.5	2.5	1.2	2
CPS2-M401	M4x0.7	8	8	3	3	11	3	5.5	2.5	1.2	2
CPS2-M402	M4x0.7	8	8	3	3	13	5	5.5	2.5	1.2	2
CPS2-M403	M4x0.7	8	8	3	3	14.5	6.5	5.5	2.5	1.2	2
CPS2-M404	M4x0.7	8	8	3	3	16	8	5.5	2.5	1.2	2
CPS2-M405	M4x0.7	8	8	3	3	17.5	9.5	5.5	2.5	1.2	2
CPS2-M406	M4x0.7	8	8	3	3	19	11	5.5	2.5	1.2	2
CPS2-M407	M4x0.7	8	8	3	3	20.5	12.5	5.5	2.5	1.2	2
CPS2-M408	M4x0.7	8	8	3	3	22	14	5.5	2.5	1.2	2
CPS2-M409	M4x0.7	8	8	3	3	24	16	5.5	2.5	1.2	2
CPS2-M410	M4x0.7	8	8	3	3	25.5	17.5	5.5	2.5	1.2	2
CPS2-M411	M4x0.7	8	8	3	3	27	19	5.5	2.5	1.2	2
CPS2-M412	M4x0.7	8	8	3	3	28.5	20.5	5.5	2.5	1.2	2
CPS2-M413	M4x0.7	8	8	3	3	30.5	22.5	5.5	2.5	1.2	2
CPS2-M414	M4x0.7	8	8	3	3	32	24	5.5	2.5	1.2	2

Custom modified products are available.

CAPTIVE PANEL SCREW
STYLE 2 Metric Standard

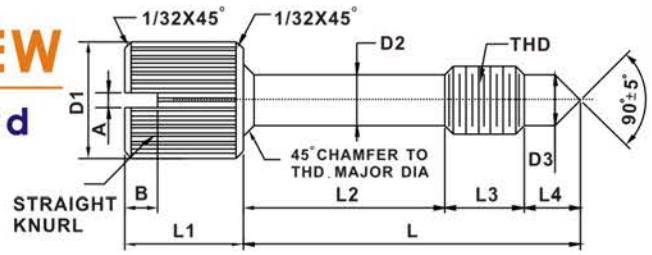

Part No.	Thread	D1	L1	D2	D3	L	L2	L3	L4	A	B
		+0.50 -0.20	+0.30 -0.30	+0.15 -0.15	+0.00 -0.30	+0.50 -0.50	+0.30 -0.30	+0.00 -0.40	+0.40 -0.40	+0.20 -0.00	+.030 -.000
CPS2-M501	M5x0.8	9.5	11	3.5	3.5	13	2.5	6.5	4	1.5	2.5
CPS2-M502	M5x0.8	9.5	11	3.5	3.5	14.5	4	6.5	4	1.5	2.5
CPS2-M503	M5x0.8	9.5	11	3.5	3.5	16	5.5	6.5	4	1.5	2.5
CPS2-M504	M5x0.8	9.5	11	3.5	3.5	17.5	7	6.5	4	1.5	2.5
CPS2-M505	M5x0.8	9.5	11	3.5	3.5	19	8.5	6.5	4	1.5	2.5
CPS2-M506	M5x0.8	9.5	11	3.5	3.5	20.5	10	6.5	4	1.5	2.5
CPS2-M507	M5x0.8	9.5	11	3.5	3.5	22	11.5	6.5	4	1.5	2.5
CPS2-M508	M5x0.8	9.5	11	3.5	3.5	24	13.5	6.5	4	1.5	2.5
CPS2-M509	M5x0.8	9.5	11	3.5	3.5	25.5	15	6.5	4	1.5	2.5
CPS2-M510	M5x0.8	9.5	11	3.5	3.5	27	16.5	6.5	4	1.5	2.5
CPS2-M511	M5x0.8	9.5	11	3.5	3.5	28.5	18	6.5	4	1.5	2.5
CPS2-M512	M5x0.8	9.5	11	3.5	3.5	30.5	20	6.5	4	1.5	2.5
CPS2-M513	M5x0.8	9.5	11	3.5	3.5	32	21.5	6.5	4	1.5	2.5
CPS2-M514	M5x0.8	9.5	11	3.5	3.5	33.5	23	6.5	4	1.5	2.5
CPS2-M515	M5x0.8	9.5	11	3.5	3.5	35	24.5	6.5	4	1.5	2.5
CPS2-M516	M5x0.8	9.5	11	3.5	3.5	36.5	26	6.5	4	1.5	2.5
CPS2-M517	M5x0.8	9.5	11	3.5	3.5	38	27.5	6.5	4	1.5	2.5
CPS2-M601	M6x1.0	12.5	14.5	4.5	4.5	16	3	8	5	2	2.5
CPS2-M602	M6x1.0	12.5	14.5	4.5	4.5	17.5	4.5	8	5	2	2.5
CPS2-M603	M6x1.0	12.5	14.5	4.5	4.5	19	6	8	5	2	2.5
CPS2-M604	M6x1.0	12.5	14.5	4.5	4.5	20.5	7.5	8	5	2	2.5
CPS2-M605	M6x1.0	12.5	14.5	4.5	4.5	22	9	8	5	2	2.5
CPS2-M606	M6x1.0	12.5	14.5	4.5	4.5	24	11	8	5	2	2.5
CPS2-M607	M6x1.0	12.5	14.5	4.5	4.5	25.5	12.5	8	5	2	2.5
CPS2-M608	M6x1.0	12.5	14.5	4.5	4.5	27	14	8	5	2	2.5
CPS2-M609	M6x1.0	12.5	14.5	4.5	4.5	28.5	15.5	8	5	2	2.5
CPS2-M610	M6x1.0	12.5	14.5	4.5	4.5	30.5	17.5	8	5	2	2.5
CPS2-M611	M6x1.0	12.5	14.5	4.5	4.5	32	19	8	5	2	2.5
CPS2-M612	M6x1.0	12.5	14.5	4.5	4.5	33.5	20.5	8	5	2	2.5
CPS2-M613	M6x1.0	12.5	14.5	4.5	4.5	35	22	8	5	2	2.5
CPS2-M614	M6x1.0	12.5	14.5	4.5	4.5	36.5	23.5	8	5	2	2.5
CPS2-M615	M6x1.0	12.5	14.5	4.5	4.5	38	25	8	5	2	2.5
CPS2-M616	M6x1.0	12.5	14.5	4.5	4.5	39.5	26.5	8	5	2	2.5
CPS2-M617	M6x1.0	12.5	14.5	4.5	4.5	41.5	28.5	8	5	2	2.5
CPS2-M618	M6x1.0	12.5	14.5	4.5	4.5	43	30	8	5	2	2.5
CPS2-M619	M6x1.0	12.5	14.5	4.5	4.5	44.5	31.5	8	5	2	2.5
CPS2-M620	M6x1.0	12.5	14.5	4.5	4.5	46	33	8	5	2	2.5
CPS2-M621	M6x1.0	12.5	14.5	4.5	4.5	47.5	34.5	8	5	2	2.5
CPS2-M622	M6x1.0	12.5	14.5	4.5	4.5	49	36	8	5	2	2.5
CPS2-M623	M6x1.0	12.5	14.5	4.5	4.5	51	38	8	5	2	2.5

Custom modified products are available.

CAPTIVE PANEL SCREW
STYLE 4 Metric Standard

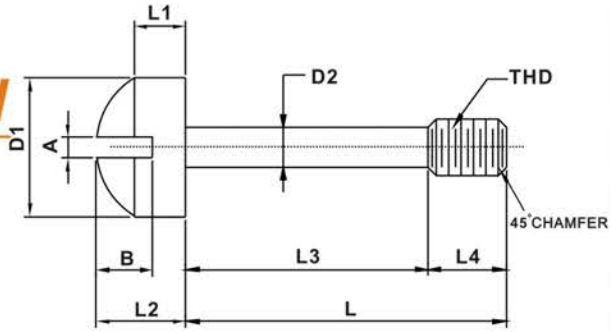

Part No.	Thread	D1	L1	D2	L	L2	L3	L4	A	B
		+0.20 -0.20	+0.00 -0.30	+0.15 -0.15	+0.50 -0.50	+0.00 -0.40	+0.30 -0.30	+0.30 -0.30	+0.00 -0.30	+.000 -.040
CPS4-M201	M2x0.4	3.2	1.5	1.5	6.5	2	2.5	4	0.8	1
CPS4-M202	M2x0.4	3.2	1.5	1.5	8	2	4	4	0.8	1
CPS4-M203	M2x0.4	3.2	1.5	1.5	9.5	2	5.5	4	0.8	1
CPS4-M204	M2x0.4	3.2	1.5	1.5	11	2	7	4	0.8	1
CPS4-M205	M2x0.4	3.2	1.5	1.5	13	2	9	4	0.8	1
CPS4-M206	M2x0.4	3.2	1.5	1.5	14.5	2	10.5	4	0.8	1
CPS4-M207	M2x0.4	3.2	1.5	1.5	16	2	12	4	0.8	1
CPS4-M208	M2x0.4	3.2	1.5	1.5	17.5	2	13.5	4	0.8	1
CPS4-M209	M2x0.4	3.2	1.5	1.5	19	2	15	4	0.8	1
CPS4-M2.501	M2.5x0.45	4	1.8	1.8	6.5	2.5	2.5	4	0.9	1.1
CPS4-M2.502	M2.5x0.45	4	1.8	1.8	8	2.5	4	4	0.9	1.1
CPS4-M2.503	M2.5x0.45	4	1.8	1.8	9.5	2.5	5.5	4	0.9	1.1
CPS4-M2.504	M2.5x0.45	4	1.8	1.8	11	2.5	7	4	0.9	1.1
CPS4-M2.505	M2.5x0.45	4	1.8	1.8	13	2.5	9	4	0.9	1.1
CPS4-M2.506	M2.5x0.45	4	1.8	1.8	14.5	2.5	10.5	4	0.9	1.1
CPS4-M2.507	M2.5x0.45	4	1.8	1.8	16	2.5	12	4	0.9	1.1
CPS4-M2.508	M2.5x0.45	4	1.8	1.8	17.5	2.5	13.5	4	0.9	1.1
CPS4-M2.509	M2.5x0.45	4	1.8	1.8	19	2.5	15	4	0.9	1.1
CPS4-M301	M3x0.5	4.3	2	2	6.5	2.7	1.7	4.8	1	1.2
CPS4-M302	M3x0.5	4.3	2	2	8	2.7	3.2	4.8	1	1.2
CPS4-M303	M3x0.5	4.3	2	2	9.5	2.7	4.7	4.8	1	1.2
CPS4-M304	M3x0.5	4.3	2	2	11	2.7	6.2	4.8	1	1.2
CPS4-M305	M3x0.5	4.3	2	2	13	2.7	8.2	4.8	1	1.2
CPS4-M306	M3x0.5	4.3	2	2	14.5	2.7	9.7	4.8	1	1.2
CPS4-M307	M3x0.5	4.3	2	2	16	2.7	11.2	4.8	1	1.2
CPS4-M308	M3x0.5	4.3	2	2	17.5	2.7	12.7	4.8	1	1.2
CPS4-M309	M3x0.5	4.3	2	2	19	2.7	14.2	4.8	1	1.2
CPS4-M310	M3x0.5	4.3	2	2	20.5	2.7	15.7	4.8	1	1.2
CPS4-M311	M3x0.5	4.3	2	2	22	2.7	17.2	4.8	1	1.2
CPS4-M312	M3x0.5	4.3	2	2	24	2.7	19.2	4.8	1	1.2
CPS4-M313	M3x0.5	4.3	2	2	25.5	2.7	20.7	4.8	1	1.2
CPS4-M3.501	M3.5x0.6	5.5	2.4	2.4	8	3.3	2.5	5.5	1.2	1.5
CPS4-M3.502	M3.5x0.6	5.5	2.4	2.4	9.5	3.3	4	5.5	1.2	1.5
CPS4-M3.503	M3.5x0.6	5.5	2.4	2.4	11	3.3	5.5	5.5	1.2	1.5
CPS4-M3.504	M3.5x0.6	5.5	2.4	2.4	13	3.3	7.5	5.5	1.2	1.5
CPS4-M3.505	M3.5x0.6	5.5	2.4	2.4	14.5	3.3	9	5.5	1.2	1.5
CPS4-M3.506	M3.5x0.6	5.5	2.4	2.4	16	3.3	10.5	5.5	1.2	1.5
CPS4-M3.507	M3.5x0.6	5.5	2.4	2.4	17.5	3.3	12	5.5	1.2	1.5
CPS4-M3.508	M3.5x0.6	5.5	2.4	2.4	19	3.3	13.5	5.5	1.2	1.5
CPS4-M3.509	M3.5x0.6	5.5	2.4	2.4	20.5	3.3	15	5.5	1.2	1.5
CPS4-M3.510	M3.5x0.6	5.5	2.4	2.4	22	3.3	16.5	5.5	1.2	1.5
CPS4-M3.511	M3.5x0.6	5.5	2.4	2.4	24	3.3	18.5	5.5	1.2	1.5
CPS4-M3.512	M3.5x0.6	5.5	2.4	2.4	25.5	3.3	20	5.5	1.2	1.5

Custom modified products are available.

CAPTIVE PANEL SCREW
STYLE 4 Metric Standard

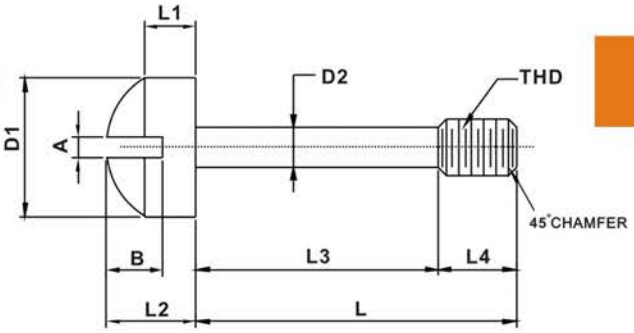

Part No.	Thread	D1	L1	D2	L	L2	L3	L4	A	B
		+0.20 -0.20	+0.00 -0.30	+0.15 -0.15	+0.50 -0.50	+0.00 -0.40	+0.30 -0.30	+0.30 -0.30	+0.00 -0.30	+.000 -.040
CPS4-M401	M4x0.7	6.4	2.9	3	8	4	2.5	5.5	1.4	1.8
CPS4-M402	M4x0.7	6.4	2.9	3	9.5	4	4	5.5	1.4	1.8
CPS4-M403	M4x0.7	6.4	2.9	3	11	4	5.5	5.5	1.4	1.8
CPS4-M404	M4x0.7	6.4	2.9	3	13	4	7	5.5	1.4	1.8
CPS4-M405	M4x0.7	6.4	2.9	3	14.5	4	9	5.5	1.4	1.8
CPS4-M406	M4x0.7	6.4	2.9	3	16	4	10.5	5.5	1.4	1.8
CPS4-M407	M4x0.7	6.4	2.9	3	17.5	4	12	5.5	1.4	1.8
CPS4-M408	M4x0.7	6.4	2.9	3	19	4	13.5	5.5	1.4	1.8
CPS4-M409	M4x0.7	6.4	2.9	3	20.5	4	15	5.5	1.4	1.8
CPS4-M410	M4x0.7	6.4	2.9	3	22	4	16.5	5.5	1.4	1.8
CPS4-M411	M4x0.7	6.4	2.9	3	24	4	18.5	5.5	1.4	1.8
CPS4-M412	M4x0.7	6.4	2.9	3	25.5	4	20	5.5	1.4	1.8
CPS4-M413	M4x0.7	6.4	2.9	3	27	4	21.5	5.5	1.4	1.8
CPS4-M414	M4x0.7	6.4	2.9	3	28.5	4	23	5.5	1.4	1.8
CPS4-M415	M4x0.7	6.4	2.9	3	30.5	4	25	5.5	1.4	1.8
CPS4-M416	M4x0.7	6.4	2.9	3	32	4	26.5	5.5	1.4	1.8
CPS4-M501	M5x0.8	8	3.3	3.3	9.5	4.6	2.4	7.1	1.5	2.1
CPS4-M502	M5x0.8	8	3.3	3.3	11	4.6	4	7.1	1.5	2.1
CPS4-M503	M5x0.8	8	3.3	3.3	13	4.6	5.9	7.1	1.5	2.1
CPS4-M504	M5x0.8	8	3.3	3.3	14.5	4.6	7.4	7.1	1.5	2.1
CPS4-M505	M5x0.8	8	3.3	3.3	16	4.6	8.9	7.1	1.5	2.1
CPS4-M506	M5x0.8	8	3.3	3.3	17.5	4.6	10.4	7.1	1.5	2.1
CPS4-M507	M5x0.8	8	3.3	3.3	19	4.6	11.9	7.1	1.5	2.1
CPS4-M508	M5x0.8	8	3.3	3.3	20.5	4.6	13.4	7.1	1.5	2.1
CPS4-M509	M5x0.8	8	3.3	3.3	22	4.6	14.9	7.1	1.5	2.1
CPS4-M510	M5x0.8	8	3.3	3.3	24	4.6	16.9	7.1	1.5	2.1
CPS4-M511	M5x0.8	8	3.3	3.3	25.5	4.6	18.4	7.1	1.5	2.1
CPS4-M512	M5x0.8	8	3.3	3.3	27	4.6	19.9	7.1	1.5	2.1
CPS4-M513	M5x0.8	8	3.3	3.3	28.5	4.6	21.4	7.1	1.5	2.1
CPS4-M514	M5x0.8	8	3.3	3.3	30.5	4.6	23.4	7.1	1.5	2.1
CPS4-M515	M5x0.8	8	3.3	3.3	32	4.6	24.9	7.1	1.5	2.1
CPS4-M516	M5x0.8	8	3.3	3.3	33.5	4.6	26.4	7.1	1.5	2.1
CPS4-M517	M5x0.8	8	3.3	3.3	35	4.6	27.9	7.1	1.5	2.1
CPS4-M518	M5x0.8	8	3.3	3.3	36.5	4.6	29.4	7.1	1.5	2.1
CPS4-M519	M5x0.8	8	3.3	3.3	38	4.6	30.9	7.1	1.5	2.1

Custom modified products are available.

CAPTIVE PANEL SCREW

STYLE 6 Metric Standard

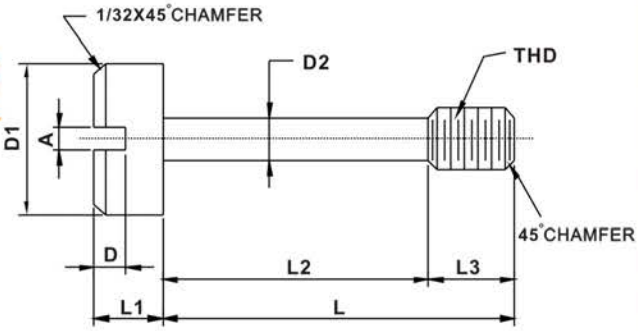

Part No.	Thread	D1	L1	D2	L	L2	L3	A	B
		+0.20 -0.20	+0.30 -0.30	+0.00 -0.15	+0.30 -0.15	+0.15 -0.00	+0.15 -0.15	+0.15 -0.00	+.030 -.000
CPS6-M301	M3x0.5	6.4	3.2	2	11.9	7.1	4.8	1.2	1.2
CPS6-M302	M3x0.5	6.4	3.2	2	13.5	8.7	4.8	1.2	1.2
CPS6-M3.501	M3.5x0.6	7.1	3.2	2.4	13.5	8	5.5	1.2	1.2
CPS6-M3.502	M3.5x0.6	7.1	3.2	2.4	15	9.5	5.5	1.2	1.2
CPS6-M3.503	M3.5x0.6	7.1	3.2	2.4	16.6	11.1	5.5	1.2	1.2
CPS6-M401	M4x0.7	8	4	3	16.7	10.3	6.4	1.5	1.5
CPS6-M402	M4x0.7	8	4	3	18.3	11.9	6.4	1.5	1.5
CPS6-M403	M4x0.7	8	4	3	19.9	13.5	6.4	1.5	1.5
CPS6-M501	M5x0.8	9.5	4.8	3.3	21.4	13.5	7.9	1.5	1.5
CPS6-M502	M5x0.8	9.5	4.8	3.3	23	15.1	7.9	1.5	1.5

Custom modified products are available.

CAPTIVE PANEL SCREW
STYLE 1 Metric Standard

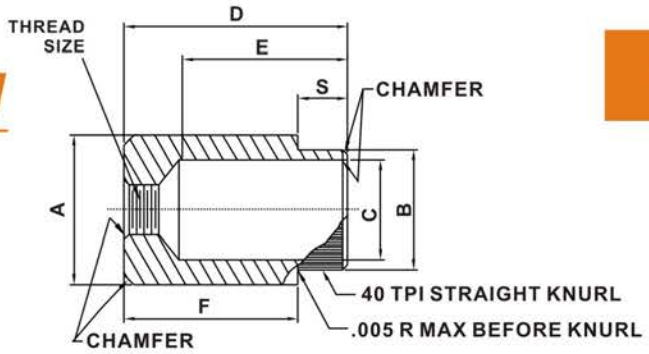

Part No.	Thread	Panel	A	B	C	D	E	F	S
			+0.1 -0.1	+0.05 -0.05	+0.10 -0.03	+0.30 -0.30	+0.15 -0.15	+0.15 -0.15	+0.15 -0.15
PSR1-M301	M3x0.5	1.2-1.8	7	5	3.8	6.5	4.2	5.2	1.3
PSR1-M302	M3x0.5	1.9-2.8	7	5	3.8	6.5	4.2	4.3	2
PSR1-M303	M3x0.5	3-4	7	5	3.8	6.5	4.2	3.2	3.2
PSR1-M3.501	M3.5x0.6	1.2-1.8	7	5	3.8	8	5.3	6.7	1.3
PSR1-M3.502	M3.5x0.6	1.9-2.8	7	5	3.8	8	5.3	6	2
PSR1-M3.503	M3.5x0.6	3-4	7	5	3.8	8	5.3	4.8	3.2
PSR1-M3.504	M3.5x0.6	4.8	7	5	3.8	8	5.3	3.2	4.8
PSR1-M401	M4x0.7	1.2-1.8	8	5.8	4.8	8	5.3	6.7	1.3
PSR1-M402	M4x0.7	1.9-2.8	8	5.8	4.8	8	5.3	6	2
PSR1-M403	M4x0.7	3-4	8	5.8	4.8	8	5.3	4.8	3.2
PSR1-M404	M4x0.7	4.8	8	5.8	4.8	8	5.3	3.2	4.8
PSR1-M501	M5x0.8	1.2-1.8	10	7.1	5.8	9.5	6	8.2	1.3
PSR1-M502	M5x0.8	1.9-2.8	10	7.1	5.8	9.5	6	7.5	2
PSR1-M503	M5x0.8	3-4	10	7.1	5.8	9.5	6	6.3	3.2
PSR1-M504	M5x0.8	4.8	10	7.1	5.8	9.5	6	4.7	4.8
PSR1-M505	M5x0.8	6.5	10	7.1	5.8	9.5	6	3.1	6.4
PSR1-M601	M6x1.0	1.2-1.8	13	9.3	7.5	11	7.4	9.7	1.3
PSR1-M602	M6x1.0	1.9-2.8	13	9.3	7.5	11	7.4	9	2
PSR1-M603	M6x1.0	3-4	13	9.3	7.5	11	7.4	7.8	3.2
PSR1-M604	M6x1.0	4.8	13	9.3	7.5	11	7.4	6.2	4.8
PSR1-M605	M6x1.0	6.5	13	9.3	7.5	11	7.4	4.6	6.4

CAPTIVE PANEL SCREW
STYLE 2 Metric Standard

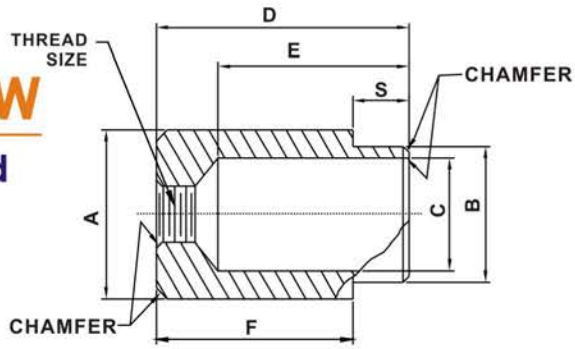

Part No.	Thread	Panel	A	B	C	D	E	F	S
			+0.10 -0.10	+0.05 -0.05	+0.10 -0.03	+0.30 -0.30	+0.15 -0.15	+0.15 -0.15	+0.15 -0.15
PSR2-M301	M3x0.5	1.3-1.7	8	6.3	5.3	9.5	6.7	7.9	1.6
PSR2-M302	M3x0.5	2.1-2.5	8	6.3	5.3	9.5	6.7	7.1	2.4
PSR2-M303	M3x0.5	2.8-3.6	8	6.3	5.3	9.5	6.7	6.3	3.2
PSR2-M304	M3x0.5	4.3-5.2	8	6.3	5.3	9.5	6.7	4.7	4.8
PSR2-M3.501	M3.5x0.6	1.3-1.7	8	6.3	5.3	9.5	6.7	7.9	1.6
PSR2-M3.502	M3.5x0.6	2.1-2.5	8	6.3	5.3	9.5	6.7	7.1	2.4
PSR2-M3.503	M3.5x0.6	2.8-3.6	8	6.3	5.3	9.5	6.7	6.3	3.2
PSR2-M3.504	M3.5x0.6	4.3-5.2	8	6.3	5.3	9.5	6.7	4.7	4.8
PSR2-M3.505	M3.5x0.6	5.9-6.7	8	6.3	5.3	9.5	6.7	3.1	6.4
PSR2-M401	M4x0.7	1.3-1.7	13	11	9.8	14.3	9.9	12.7	1.6
PSR2-M402	M4x0.7	2.1-2.5	13	11	9.8	14.3	9.9	11.9	2.4
PSR2-M403	M4x0.7	2.8-3.6	13	11	9.8	14.3	9.9	11.1	3.2
PSR2-M404	M4x0.7	4.3-5.2	13	11	9.8	14.3	9.9	9.5	4.8
PSR2-M405	M4x0.7	5.9-6.7	13	11	9.8	14.3	9.9	7.9	6.4
PSR2-M501	M5x0.8	1.3-1.7	13	11	9.8	14.3	10	12.7	1.6
PSR2-M502	M5x0.8	2.1-2.5	13	11	9.8	14.3	10	11.9	2.4
PSR2-M503	M5x0.8	2.8-3.6	13	11	9.8	14.3	10	11.1	3.2
PSR2-M504	M5x0.8	4.3-5.2	13	11	9.8	14.3	10	9.5	4.8
PSR2-M505	M5x0.8	5.9-6.7	13	11	9.8	14.3	10	7.9	6.4
PSR2-M601	M6x1.0	1.3-1.7	13	11	9.8	14.3	10.2	12.7	1.6
PSR2-M602	M6x1.0	2.1-2.5	13	11	9.8	14.3	10.2	11.9	2.4
PSR2-M603	M6x1.0	2.8-3.6	13	11	9.8	14.3	10.2	11.1	3.2
PSR2-M604	M6x1.0	4.3-5.2	13	11	9.8	14.3	10.2	9.5	4.8
PSR2-M605	M6x1.0	5.9-6.7	13	11	9.8	14.3	10.2	7.9	6.4

Custom modified products are available.

CAPTIVE PANEL SCREW
STYLE 3 Metric Standard

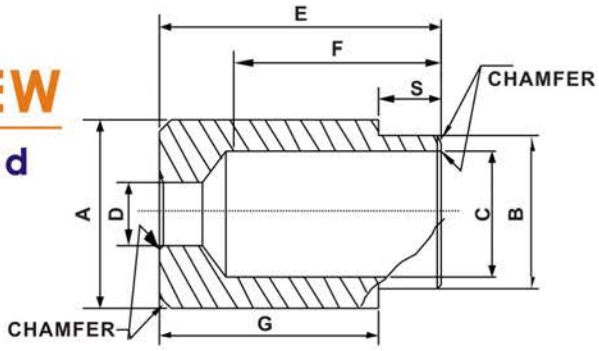

Part No.	Thread	Panel	A	B	C	D	E	F	G	S
			+0.10 -0.10	+0.05 -0.05	+0.10 -0.03	+0.10 -0.03	+0.30 -0.30	+0.30 -0.30	+0.13 -0.13	+0.13 -0.13
PSR3-M301	M3x0.5	1.3-1.7	8	6.3	5.3	3.2	9.5	7.6	7.9	1.6
PSR3-M302	M3x0.5	2.1-2.5	8	6.3	5.3	3.2	9.5	7.6	7.1	2.4
PSR3-M303	M3x0.5	2.8-3.6	8	6.3	5.3	3.2	9.5	7.6	6.3	3.2
PSR3-M304	M3x0.5	4.3-5.2	8	6.3	5.3	3.2	9.5	7.6	4.7	4.8
PSR3-M3.501	M3.5x0.6	1.3-1.7	8	6.3	5.3	3.9	9.5	7.7	7.9	1.6
PSR3-M3.502	M3.5x0.6	2.1-2.5	8	6.3	5.3	3.9	9.5	7.7	7.1	2.4
PSR3-M3.503	M3.5x0.6	2.8-3.6	8	6.3	5.3	3.9	9.5	7.7	6.3	3.2
PSR3-M3.504	M3.5x0.6	4.3-5.2	8	6.3	5.3	3.9	9.5	7.7	4.7	4.8
PSR3-M3.505	M3.5x0.6	5.9-6.7	8	6.3	5.3	3.9	9.5	7.7	3.1	6.4
PSR3-M401	M4x0.7	1.3-1.7	13	11	9.8	4.5	14.3	11.4	12.7	1.6
PSR3-M402	M4x0.7	2.1-2.5	13	11	9.8	4.5	14.3	11.4	11.9	2.4
PSR3-M403	M4x0.7	2.8-3.6	13	11	9.8	4.5	14.3	11.4	11.7	3.2
PSR3-M404	M4x0.7	4.3-5.2	13	11	9.8	4.5	14.3	11.4	9.5	4.8
PSR3-M405	M4x0.7	5.9-6.7	13	11	9.8	4.5	14.3	11.4	7.9	6.4
PSR3-M501	M5x0.8	1.3-1.7	13	11	9.8	4.5	14.3	11.8	12.7	1.6
PSR3-M502	M5x0.8	2.1-2.5	13	11	9.8	4.5	14.3	11.8	11.9	2.4
PSR3-M503	M5x0.8	2.8-3.6	13	11	9.8	4.5	14.3	11.8	11.7	3.2
PSR3-M504	M5x0.8	4.3-5.2	13	11	9.8	4.5	14.3	11.8	9.5	4.8
PSR3-M505	M5x0.8	5.9-6.7	13	11	9.8	4.5	14.3	11.8	7.9	6.4
PSR3-M601	M6x1.0	1.3-1.7	13	11	9.8	6.5	14.3	12.1	12.7	1.6
PSR3-M602	M6x1.0	2.1-2.5	13	11	9.8	6.5	14.3	12.1	11.9	2.4
PSR3-M603	M6x1.0	2.8-3.6	13	11	9.8	6.5	14.3	12.1	11.7	3.2
PSR3-M604	M6x1.0	4.3-5.2	13	11	9.8	6.5	14.3	12.1	9.5	4.8
PSR3-M605	M6x1.0	5.9-6.7	13	11	9.8	6.5	14.3	12.1	7.9	6.4

Custom modified products are available.

CAPTIVE PANEL SCREW
STYLE 4 Metric Standard

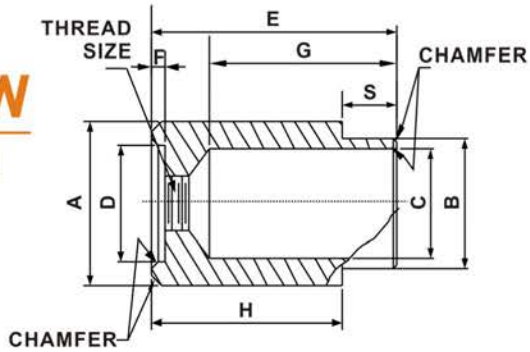

Part No.	Thread	Panel	A	B	C	D	E	F	G	H	S
			+0.10 -0.10	+0.05 -0.05	+0.10 -0.03	+0.15 -0.00	+0.30 -0.30	+0.30 -0.00	+0.15 -0.15	+0.15 -0.15	+0.15 -0.15
PSR4-M301	M3x0.5	1.3-1.7	8	6.3	5.3	4.9	11	2	7.5	9.4	1.6
PSR4-M302	M3x0.5	2.1-2.5	8	6.3	5.3	4.9	11	2	7.5	8.6	2.4
PSR4-M303	M3x0.5	2.8-3.6	8	6.3	5.3	4.9	11	2	7.5	7.8	3.2
PSR4-M304	M3x0.5	4.3-5.2	8	6.3	5.3	4.9	11	2	7.5	6.2	4.8
PSR4-M305	M3x0.5	5.9-6.7	8	6.3	5.3	4.9	11	2	7.5	4.6	6.4
PSR4-M3.501	M3.5x0.6	1.3-1.7	8	6.3	5.3	4.9	11	2	7.6	9.4	1.6
PSR4-M3.502	M3.5x0.6	2.1-2.5	8	6.3	5.3	4.9	11	2	7.6	8.6	2.4
PSR4-M3.503	M3.5x0.6	2.8-3.6	8	6.3	5.3	4.9	11	2	7.6	7.8	3.2
PSR4-M3.504	M3.5x0.6	4.3-5.2	8	6.3	5.3	4.9	11	2	7.6	6.2	4.8
PSR4-M3.505	M3.5x0.6	5.9-6.7	8	6.3	5.3	4.9	11	2	7.6	4.6	6.4
PSR4-M401	M4x0.7	1.3-1.7	13	11	9.8	7.9	16	2.4	9.9	14.4	1.6
PSR4-M402	M4x0.7	2.1-2.5	13	11	9.8	7.9	16	2.4	9.9	13.6	2.4
PSR4-M403	M4x0.7	2.8-3.6	13	11	9.8	7.9	16	2.4	9.9	12.8	3.2
PSR4-M404	M4x0.7	4.3-5.2	13	11	9.8	7.9	16	2.4	9.9	11.2	4.8
PSR4-M405	M4x0.7	5.9-6.7	13	11	9.8	7.9	16	2.4	9.9	9.6	6.4
PSR4-M501	M5x0.8	1.3-1.7	13	11	9.8	7.9	16	2.4	10	14.4	1.6
PSR4-M502	M5x0.8	2.1-2.5	13	11	9.8	7.9	16	2.4	10	13.6	2.4
PSR4-M503	M5x0.8	2.8-3.6	13	11	9.8	7.9	16	2.4	10	12.8	3.2
PSR4-M504	M5x0.8	4.3-5.2	13	11	9.8	7.9	16	2.4	10	11.2	4.8
PSR4-M505	M5x0.8	5.9-6.7	13	11	9.8	7.9	16	2.4	10	9.6	6.4
PSR4-M601	M6x1.0	1.3-1.7	13	11	9.8	7.9	16	2.4	10.2	14.4	1.6
PSR4-M602	M6x1.0	2.1-2.5	13	11	9.8	7.9	16	2.4	10.2	13.6	2.4
PSR4-M603	M6x1.0	2.8-3.6	13	11	9.8	7.9	16	2.4	10.2	12.8	3.2
PSR4-M604	M6x1.0	4.3-5.2	13	11	9.8	7.9	16	2.4	10.2	11.2	4.8
PSR4-M605	M6x1.0	5.9-6.7	13	11	9.8	7.9	16	2.4	10.2	9.6	6.4

Custom modified products are available.

CAPTIVE PANEL SCREW
STYLE 5 Metric Standard

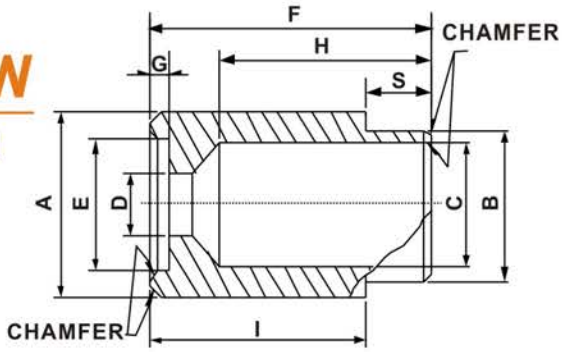

Part No.	Thread	Panel	A	B	C	D	E	F	G	H	I	S
			+0.10 -0.10	+0.05 -0.05	+0.10 -0.03	+0.10 -0.03	+0.15 -0.00	+0.30 -0.30	+0.30 -0.00	+0.15 -0.15	+0.15 -0.15	+0.15 -0.15
PSR5-M301	M3x0.5	1.3-1.7	8	6.3	5.3	3.2	4.9	11	2	7.6	9.4	1.6
PSR5-M302	M3x0.5	2.1-2.5	8	6.3	5.3	3.2	4.9	11	2	7.6	8.6	2.4
PSR5-M303	M3x0.5	2.8-3.6	8	6.3	5.3	3.2	4.9	11	2	7.6	7.8	3.2
PSR5-M304	M3x0.5	4.3-5.2	8	6.3	5.3	3.2	4.9	11	2	7.6	6.2	4.8
PSR5-M305	M3x0.5	5.9-6.7	8	6.3	5.3	3.2	4.9	11	2	7.6	4.6	6.4
PSR5-M3.501	M3.5x0.6	1.3-1.7	8	6.3	5.3	3.8	4.9	11	2	7.8	9.4	1.6
PSR5-M3.502	M3.5x0.6	2.1-2.5	8	6.3	5.3	3.8	4.9	11	2	7.8	8.6	2.4
PSR5-M3.503	M3.5x0.6	2.8-3.6	8	6.3	5.3	3.8	4.9	11	2	7.8	7.8	3.2
PSR5-M3.504	M3.5x0.6	4.3-5.2	8	6.3	5.3	3.8	4.9	11	2	7.8	6.2	4.8
PSR5-M3.505	M3.5x0.6	5.9-6.7	8	6.3	5.3	3.8	4.9	11	2	7.8	4.6	6.4
PSR5-M401	M4x0.7	1.3-1.7	13	11	9.8	4.5	7.9	16	2.4	10.8	14.4	1.6
PSR5-M402	M4x0.7	2.1-2.5	13	11	9.8	4.5	7.9	16	2.4	10.8	13.6	2.4
PSR5-M403	M4x0.7	2.8-3.6	13	11	9.8	4.5	7.9	16	2.4	10.8	12.8	3.2
PSR5-M404	M4x0.7	4.3-5.2	13	11	9.8	4.5	7.9	16	2.4	10.8	11.2	4.8
PSR5-M405	M4x0.7	5.9-6.7	13	11	9.8	4.5	7.9	16	2.4	10.8	9.6	6.4
PSR5-M501	M5x0.8	1.3-1.7	13	11	9.8	5.2	7.9	16	2.4	11	14.4	1.6
PSR5-M502	M5x0.8	2.1-2.5	13	11	9.8	5.2	7.9	16	2.4	11	13.6	2.4
PSR5-M503	M5x0.8	2.8-3.6	13	11	9.8	5.2	7.9	16	2.4	11	12.8	3.2
PSR5-M504	M5x0.8	4.3-5.2	13	11	9.8	5.2	7.9	16	2.4	11	11.2	4.8
PSR5-M505	M5x0.8	5.9-6.7	13	11	9.8	5.2	7.9	16	2.4	11	9.6	6.4
PSR5-M601	M6x1.0	1.3-1.7	13	11	9.8	6.4	7.9	16	2.4	11.2	14.4	1.6
PSR5-M602	M6x1.0	2.1-2.5	13	11	9.8	6.4	7.9	16	2.4	11.2	13.6	2.4
PSR5-M603	M6x1.0	2.8-3.6	13	11	9.8	6.4	7.9	16	2.4	11.2	12.8	3.2
PSR5-M604	M6x1.0	4.3-5.2	13	11	9.8	6.4	7.9	16	2.4	11.2	11.2	4.8
PSR5-M605	M6x1.0	5.9-6.7	13	11	9.8	6.4	7.9	16	2.4	11.2	9.6	6.4

Custom modified products are available.

PANEL SCREW RETAINER SPRINGS & WASHERS

Metric Standard

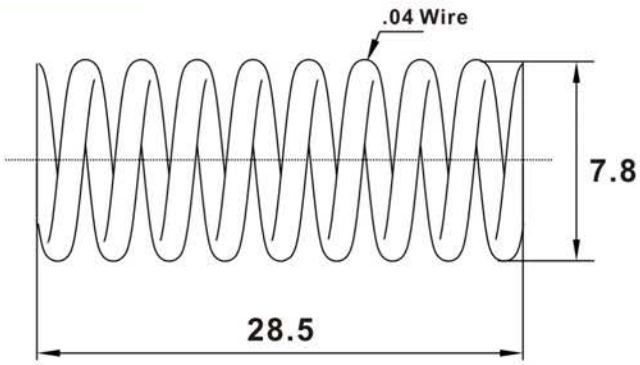

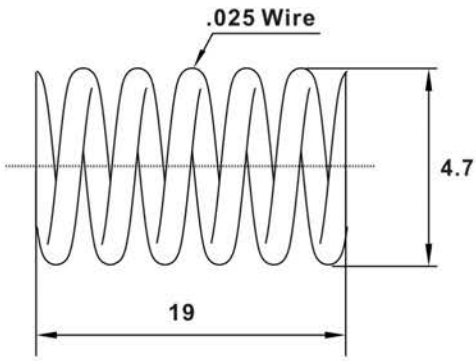

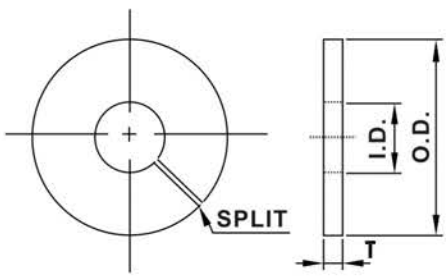

Springs

Part No.	Material	Thread Size	O.D.	Length
SPRING-MCP1	Satinless Steel 300Series	M3x0.5~M3.5x0.6	4.7	19
SPRING-MCP2	Satinless Steel 300Series	All other threads	7.8	28.5

Washers

Part No.	Material	Thread Size	O.D.	I.D.	L
			+.000 -.015	+.000 -.015	+.015 -.015
WASHER-MCP1	Satinless Steel 300Series	M3x0.5	4.4	2.4	0.25
WASHER-MCP2	Satinless Steel 300Series	M3.5x0.6	4.4	2.9	0.25
WASHER-MCP3	Satinless Steel 300Series	M4x0.7	8	3.8	0.32
WASHER-MCP4	Satinless Steel 300Series	M5x0.8	8	4.3	0.32
WASHER-MCP5	Satinless Steel 300Series	M6x1.0	8	5.2	0.32

Custom modified products are available.